Protecting you for life's best moments®

Instruction Manual
T-Link® Respirator

Employers: Read this manual and the flow control device instruction manual and carry out the employer responsibilities.

Product users: Read this manual and the flow control device instruction manual and follow the product user safety instructions.

Manuals are regularly updated. Make sure this manual is available to all users for reference.

Current version of manual and other languages: gvs-rpb.com/resources



CE 2797

UKCA 0086

EN14594:2018 3B
EN12941:2023 TH3
RESPIRATORY PROTECTION

EN352-3:2020
HEARING PROTECTION
Only in conjunction with 18-533 earmuffs and 18-534 SENA Tuffstalk M-02.

EN397:2012+A1:2012
HARD HAT PROTECTION
Conforms to impact and optional clauses. Not all configurations conform to this standard. Please visit gvs-rpb.com for more details.

EN812:2012
BUMP CAP PROTECTION
Not all configurations conform to this standard. Please visit gvs-rpb.com for more details.

EN166:2001 CLASS 1F3
EYE & FACE PROTECTION
Not all configurations conform to this standard. Please visit gvs-rpb.com for more details.

PRODUCT CERTIFICATION
BSI Certified Product

AS/NZS 1716:2012
BMP# 714303
RESPIRATORY PROTECTION

AS/NZS 1801:1997
BMP# 714306
HARD HAT PROTECTION
Not all configurations conform to this standard. Please visit gvs-rpb.com for more details.

AS/NZS 1337.1:2010
BMP# 714304
EYE & FACE PROTECTION
Not all configurations conform to this standard. Please visit gvs-rpb.com for more details.

EN English P.2

Protecting you for life's best moments.

CONTENTS

- EXPLANATION OF SIGNAL WORDS AND SYMBOLS 2
- INTRODUCTION 4
- IMPORTANT SAFETY INFORMATION
  - PROTECTION PROVIDED AND LIMITATIONS 4
  - RESPIRATORY COMPONENT DIAGRAMS - CAUTIONS & LIMITATIONS 7
  - AIR SOURCE, FITTINGS, AND PRESSURE 9
  - EMPLOYER RESPONSIBILITIES 10
  - PRODUCT USER SAFETY INSTRUCTIONS 12
  - BREATHING AIR PRESSURE TABLE 14
- RESPIRATOR SETUP AND CARE 16
- DONNING AND DOFFING 24
- STORAGE 25
- COMMUNICATIONS
  - COMMS-LINK™ COMMUNICATION SYSTEM 26
  - RADIO CONNECTOR COMPATIBILITY 28
- PARTS AND ACCESSORIES 30
- WARRANTY AND LIABILITY STATEMENT 36

EXPLANATION OF SIGNAL WORDS AND SYMBOLS

The following signal word and safety symbols are used in this manual and product labeling:

⚠ WARNING **WARNING** indicates a hazardous situation that, if not avoided, could result in death or serious injury.

⚠ DANGER **DANGER** Indicates a hazardous situation that, if not avoided, will result in death or serious injury.



Read the Instruction Manual.
Additional copies of GVS-RPB® manuals can be found at gvs-rpb.com.

CERTIFIED BY:

CE: BSI Group The Netherlands B.V. (NB2797), Say Building, John M. Keynesplein 9, 1066 EP, Amsterdam, NL

UKCA: BSI Group (AB0086), Kitemark Court, Knowhill, Milton Keynes MK5 8PP, United Kingdom

GVS-RPB Safety LLC is an ISO9001 certified company.

GVS-RPB® Safety - Global Headquarters
2807 Samoset Rd, Royal Oak, MI 48073, USA
T: 1-866-494-4599 F: 1-866-494-4509 E: sales@gvs.com

GVS S.p.A.
Via Roma 50, 40069 Zona Industriale BO, Italy
T: +39 0516176391 E: sales@gvs.com

GVS Filter Technology UK Ltd.
Caton Road, Lancaster, Lancashire, UK, LA1 3PE
T: +44 (0)1524 847600 E: sales@gvs.com

gvs-rpb.com

Copyright ©2025 GVS-RPB SAFETY, LLC. All rights reserved. All materials contained on this website are protected by United States copyright law and may not be reproduced, distributed, transmitted, displayed, published or broadcast without the prior written permission of GVS-RPB SAFETY, LLC. You may not alter or remove any trademark, copyright or other notice from copies of the content.

All trademarks, service marks, and logos used in this publication, both registered and unregistered, are the trademarks, service marks, or logos of their respective owners. All rights in the GVS-RPB Intellectual Property contained in this publication, including copyright, trademarks, service marks, trade secret, and patent rights are reserved. GVS-RPB Intellectual Property means any patent, patented articles, patent applications, designs, industrial designs, copyrights, software, source code, database rights, moral rights, inventions, techniques, technical data, trade secrets, know-how, brands, trademarks, trade names, slogans, logos, and any other common law and proprietary rights, whether registered or unregistered anywhere in the world, that are owned by, developed in whole or in part by, or licensed by GVS-RPB SAFETY, LLC.

For technical assistance contact our Customer Service Department at 1-866-494-4599 or email: sales@gvs.com

Form #: 7.20.544
Rev: 12

Protecting you for life's best moments.

INTRODUCTION

The GVS-RPB® T-LINK® is a multiuse respirator for a number of different applications where there is a need for protection from airborne contaminants, eye/face protection and head protection; such as painting, chemical handling and other industrial applications. When the Zytec® material is used, the hood can be used for grinding, brazing, and other industrial applications where fire retardant is needed. The optional QUIET-LINK™ Ear Defender earmuff system can add hearing protection. Additionally, the VISION-LINK™ light attachment is available to provide light to the work area and the COMMS-LINK™ in-helmet communication system allows for hands free radio communication.

This product must be inspected and maintained in accordance with this instruction manual at all times.

See PROTECTION PROVIDED AND LIMITATIONS for details.

IMPORTANT SAFETY INFORMATION

⚠ WARNING Improper selection, fit, use, or maintenance of this product can result in injury; life threatening delayed lung, skin or eye disease; or death. This product is intended for occupational use in accordance with applicable standards or regulations for your location, industry, and activity (see Employer Responsibilities, page 10). Familiarity with standards and regulations related to the use of this protective equipment is recommended, even if they do not directly apply to you. If self-employed or if used in a non-occupational setting, refer to Employer Responsibilities and Product User Safety Instructions. Go to gvs-rpb.com/important-safety-information for helpful links to CE standards and other content.

Employers: Read this manual and the air supply device Instruction Manual and carry out the Employer Responsibilities (page 10).

Product users: Read this manual and the air supply device Instruction Manual and follow the Product User Safety Instructions (page 12).

Check website for updates. Product manuals are regularly updated. Visit gvs-rpb.com/resources for the most recent version of this manual before using the product.

PROTECTION PROVIDED AND LIMITATIONS

RESPIRATION

The GVS-RPB T-LINK is approved an respirator in the categories as follows:

Powered Air

The GVS-RPB T-LINK Respirator, when properly fitted and used with all required components, including the Breathing Tube Assembly and the GVS-RPB PX5® Powered Air Purifying Respirator, is approved to EN 12941:2023 TH3 as a powered air purifying respirator with a nominal protection factor of 500. As such, it significantly reduces, but does not completely eliminate, the breathing of contaminates by the respirator wearer. Specific protection depends

on the filter selected for use in the GVS-RPB PX5 PAPR (see the PX5 Instruction Manual).

Head-top Classifications *TABLE 1.1*

PAPR MODEL	RESPIRATOR HEAD-TOPS	EN 12941 CLASSIFI-CATION	NOMINAL PROTECTION FACTOR	BREATHING TUBES 04-831 04-841	HEPA FILTER	COMBI-NATION FILTERS
PX5	17-712	TH3	500	✓	✓	✓
PX5	17-713	TH3	500	✓	✓	✓
PX5	17-713-S	TH3	500	✓	✓	✓
PX5	17-713-SX	TH3	500	✓	✓	✓
PX5	17-711	TH3	500	✓	✓	✓

The EN 12941 standard defines three classes of performance (TH1, TH2 and TH3). The numbers define the level of performance (inward leakage) and the pull strength of the breathing tubes and couplings within the classification. Inward leakage for classification TH1 is maximum 10%, for TH2 maximum 2% and for TH3 maximum 0.2%.

Supplied Air

The GVS-RPB T-LINK Respirator, when properly fitted and used with all required components, including the Breathing Tube Assembly, 03-102 Constant Flow Valve or the 03-502 C40™ Climate Control Device, and GVS-RPB Breathing Air Line is approved to EN 14594: 2018 Class 3B F as a supplied air respirator with a nominal protection factor of 500. As such, it significantly reduces, but does not completely eliminate, the breathing of contaminates by the respirator wearer. Use with an airline filter, such as the 04-900 GVS-RPB RADEX® Airline Filter. Specific protection depends on the setup of the airline filter (see the GVS-RPB RADEX Instruction Manual).

HAZARD LIMITATIONS

The GVS-RPB T-LINK Respirator is **NOT FOR USE** if**:**

- In atmospheres immediately dangerous to life or health (IDLH).
- Wearer cannot escape without the aid of the respirator.
- Atmosphere contains less than 21% ±1% oxygen.
- In abrasive blasting applications.
- For protection against hazardous gases (e.g., carbon monoxide).
- Contaminants are in excess of regulations or recommendations.
- Contaminants or contaminant concentrations are unknown.
- Work area is poorly ventilated.
- The temperature is outside the range of -10°C to +60°C (14°F to 140°F).
- A flammable or explosive atmosphere is present when used with systems including electrical parts that are not intrinsically safe, PX5, Vision-Link, 16-922 COMMS-LINK, 09-913 PTT, or 18-534 SENA®.

PROTECTION PROVIDED AND LIMITATIONS CONTINUED

FACE AND EYES:

- The T-LINK with **Safety Lens** meets EN 166:2002 Class 1F3 (AS/NZS 1337.1:2010) face shield requirements and is designed for grinding, painting, and other industrial applications.
- The T-LINK is not designed or tested to provide protection against molten metals or corrosive liquids.
- **Note:** Safety glasses may be required to be worn depending on the job hazard analysis. The T-LINK does not protect against the potential transfer of impact to glasses worn underneath the hood. It does not provide complete eye and face protection against severe impact and penetration and is not a substitute for good safety practices and engineering controls.

HEAD:

- The T-LINK, when equipped with the standard lightweight helmet, is designed to act as a bump cap, with minimal head protection. It **does** meet the EN 812:2012 requirements in this configuration. It **does not** meet the EN 397:2012+A1:2012 (AS/NZS 1801:1997) requirements in this configuration.
- The T-LINK, when equipped with the optional hard hat, **conforms** to the impact and optional clauses of EN 397:2012+A1:2012 (AS/NZS 1801:1997) requirements for physical head protection as a hard hat. The helmet is design to provide limited head protection by reducing the force of falling objects striking the top of the head. Ensure the helmet is adjusted to properly fit the user by adjusting the head harness and side pads or QUIET-LINK if installed.

HEARING:

- When used with the T-Link, the Quiet-Link Ear Defender system provides a Noise Reduction Rating (NRR) of 25db to meet EN 352-3:2020. Refer to the Quiet-Link™ instruction manual to ensure proper installation and fit .
- When used with the T-Link, the SENA® Tufftalk M-02 system provides a Noise Reduction Rating (NRR) of 31db to meet EN 352-3:2020. Refer to the SENA® Tufftalk M-02 instruction sheet to ensure proper installation and fit .
- Hearing protection must be worn and properly fitted when exposed to noise levels that exceed the permissible exposure levels. It is require that additional hear protection is worn under this respirator, such as the 18-533 Quite Link Ear Defenders, 18-534 SENA® Tufftalk M-02, or a pair of Foam or Silicon Earplug with an SNR 25 rating or higher.
- Hearing protection must be worn with the 03-822-DC back pack with the 03-841 short breathing tube configuration when used with the gas filters.

The T-Link is a loose fitting respirator, caution is required when used in high winds.

PPE REGULATION

- The T-LINK conforms to the PPE Regulation (EU) 2016/425. Regulation 2016/425 on PPE as brought into UK Law and amended.
- The Declaration of Conformity for CE and UKCA can be found at gvs-rpb.com/resources
- See the Storage section for information on packaging and protection required for transportation.

RESPIRATOR COMPONENT DIAGRAM - PAPR

The GVS-RPB T-LINK Respirator consists of 3 main components, as shown in Figure 1.1. All 3 components must be present and properly assembled to constitute a complete approved to EN 12941 as power air purifying respirator.

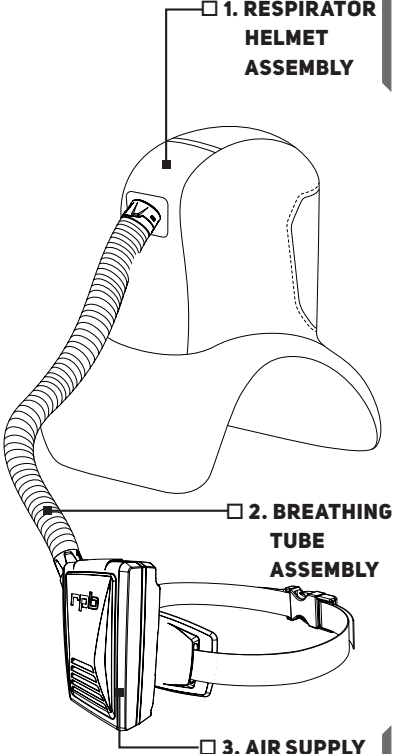

FIGURE 1.1

CAUTIONS AND LIMITATIONS

POWERED AIR

A. Not for use in atmospheres containing less than 21% ±1% oxygen.

B. Not for use in atmospheres immediately dangerous to life or health.

C. Do not exceed maximum use concentrations established by regulatory standards.

F. Do not use Powered Air-Purifying Respirators if airflow is less than 180 lpm (6.4 cfm) for PX5.

H. Follow established cartridge and canister change schedules or observe ESLI to ensure that cartridge and canisters are replaced before breakthrough occurs.

I. Contains electrical parts that may cause an ignition in flammable or explosive atmospheres.

J. Failure to properly use and maintain this product could result in injury or death.

L. Follow the manufacturer's User's Instructions for changing cartridges, canister and/or filters.

M. All approved respirators shall be selected, fitted, used and maintained in accordance with applicable regulations.

N. Never substitute, modify, add or omit parts. Use only exact replacement parts in the configuration as specified by the manufacturer.

O. Refer to user's instructions, and/or maintenance manuals for information on use and maintenance of these respirators.

P. This respirator is not evaluated as a surgical mask..

RESPIRATOR COMPONENT DIAGRAM - SAR

The GVS-RPB T-LINK Respirator consists of 3 main components, as shown in Figure 1.2. All 3 components must be present and properly assembled to constitute a complete approved to EN 14594 as a supplied air respirator.

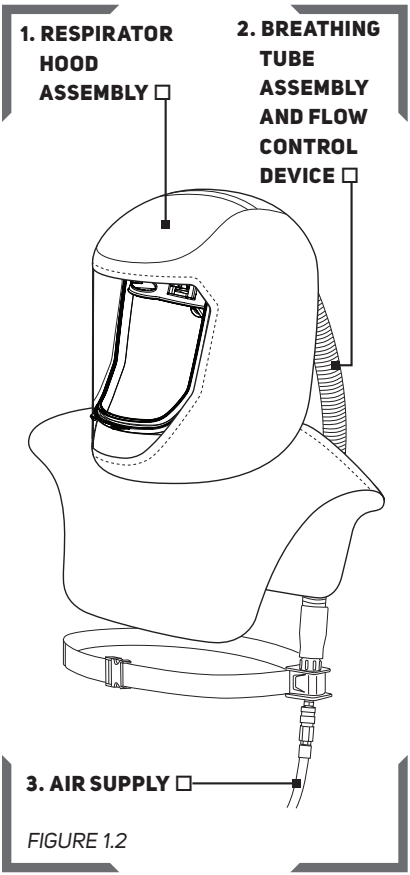

FIGURE 1.2

CAUTIONS AND LIMITATIONS

SUPPLIED AIR

A. Not for use in atmospheres containing less than 21% ±1% oxygen.
B. Not for use in atmospheres immediately dangerous to life or health.
C. Do not exceed maximum use concentrations established by regulatory standards.
D. Air-line respirators can be used only when the respirators are supplied with respirable air meeting the requirements of EN 12021 (AS/NZS 1715) or higher quality.
E. Use only the pressure ranges and hose lengths specified in the user's instructions.
J. Failure to properly use and maintain this product could result in injury or death.
M. All approved respirators shall be selected, fitted, used and maintained in accordance with applicable regulations.
N. Never substitute, modify, add or omit parts. Use only exact replacement parts in the configuration as specified by the manufacturer.
O. Refer to user's instructions, and/or maintenance manuals for information on use and maintenance of these respirators.
S. Special or Critical User Instructions and/or specific limitations apply. Refer to "Breathing Air Pressure Table" on page 14 before donning.

AIR SOURCE, FITTINGS, AND PRESSURE

AIR SOURCE

Powered Air

Check that the contaminated area is within the limits of use for a Powered Air Purifying Respirator and determine the type of contamination. Once the contamination level has been confirmed you can then determine the filter cartridge to be used for the application, to make sure that you are sufficiently protected. Make sure that the area is well ventilated and that regular air samples are taken to confirm the atmosphere stays within the levels recommended by the governing bodies. Follow the PX5 PAPR Instruction Manual for more details.

TABLE 1.2

AIR FLOW	MMDF: 170slpm (6cfm). Speed 1: Greater than 180slpm (6.4cfm). Speed 2: Greater than 205slpm (7.2cfm) Speed 3: Greater than 230slpm (8.1cfm)

Supplied Air

Locate the air source in a clean air environment, always use a filter on the inlet of your air source. Make sure the air source is somewhere that vehicles, forklifts, and other machinery are not running near the air inlet, as this will cause carbon monoxide to be drawn into your air supply. Always use suitable after coolers/dryers with filters and carbon monoxide alarms to ensure clean breathable air is supplied at all times. A Radex Airline Filter (04-900) and a GX4® Gas Monitor (08-400) are recommended. The air should be regularly sampled to ensure that it meets EN 12021 (AS/NZS 1715) or higher requirements.

AIR QUALITY

This respirator must be supplied with clean breathable air at all times. Breathable air must at least meet the requirements for EN 12021 (AS/NZS 1715). The RPB T-LINK does not purify air or filter contaminants. A carbon monoxide monitor must be used at all times.

⚠ DANGER Do not connect the respirator's air supply hose to nitrogen, toxic gases, inert gases or other unbreathable EN 12021 (AS/NZS 1715) non-compliant air sources. Check the air source before using the respirator. This apparatus is not designed for use with mobile air supply systems i.e. cylinders. Connecting the supply hose to a non-breathable air source will result in serious injury or death.

BREATHING AIR SUPPLY HOSES AND FITTINGS

GVS-RPB air supply hoses and fittings must be used between the point of attachment and the respirator breathing air connection at the wearer's belt. The hose sections must be within the correct length and the amount of sections must be within the number specified in the breathing air pressure table on page 14.

BREATHING AIR PRESSURE

The air pressure must be continually monitored at the point of attachment. Air pressure must be read from a reliable pressure gauge whilst the respirator has air flowing through it.

EMPLOYER RESPONSIBILITIES

Your specific responsibilities may vary by location and industry, but in general GVS-RPB expects that employers will:

- **Follow all applicable standards and regulations for your location, industry, and activity.** Depending on your location and industry, a number of standards and regulations may apply to your selection and use of respirators and other personal protective equipment. These may include such things as national, local, or military standards and regulations and consensus standards such as CE and AS/NZS. There are also requirements specific to particular contaminants, e.g. silica (see gvs-rpb.com/important-safety-information for more information), asbestos, organic pathogens, etc. Know which requirements apply to your location and industry.

- **Have appropriate safety programs in place.**
  Have and follow:
  - ☐ A workplace safety program.
  - ☐ A written respiratory protection program in accordance with applicable standards and regulations.

- **In accordance with the above**,
  - ☐ **Perform a hazard analysis and select appropriate equipment for each activity.** A hazard analysis should be performed by a qualified person. Controls should be in place as appropriate and a qualified person should determine what kind of respiratory, face and eye, head, and hearing protection is appropriate for the intended activities and environments of use. (For example, select a respirator appropriate to the specific airborne hazards, with consideration of workplace and user factors and with an Nominal Protection Factor (NPF) that meets or exceeds the required level for employee protection, select welding face and eye protection appropriate to the type of welding to be done, etc.)

    As applicable, check your workplace safety program, respiratory protection program, and standards and regulations for your activity or industry for related protection requirements, and see this manual *(Protection Provided and Limitations, page 4)* and the PX5 PAPR or Supplied Air Device Instruction Manual for product specifications.

  - ☐ **Be sure employees are medically qualified to use a respirator.**
    Have a qualified physician or other licensed health care professional (PLHCP) perform medical evaluations using a medical questionnaire or an initial medical examination.

  - ☐ **Train employees in the T-LINK's use, maintenance, and limitations.**
    Appoint a qualified individual who is knowledgable about the GVS-RPB T-LINK to provide training:

    Qualifications of the Respirator Trainer. Anyone providing respirator training shall:
    a) be knowledgable in the application and use of the respirator(s);
    b) have practical knowledge in the selection and use of respirator(s) and work practices at the site;
    c) have an understanding of the site's respirator program; and

d) be knowledgable of applicable regulations.

Train each T-LINK user in the product's use, application, inspection, maintenance, storage, fitting, and limitations in accordance with the content of this Instruction Manual and the approved air supply device Instruction Manual and standard or regulatory requirements. Ensure that each intended user reads both these manuals.

☐ **Ensure that equipment is properly set up, used, and maintained.**
Make sure that equipment is properly set up, inspected, fitted, used, and maintained, including selection of the appropriate air filter cartridge and, when applicable, welding filter shade adjustments, for the application.

☐ **Measure and monitor airborne contaminants in the work area.**
Measure and monitor airborne contaminant levels in the work area in accordance with applicable requirements. Make sure work area is well ventilated.

☐ **If you have any questions, contact GVS-RPB.**
■ Call Customer Service Department at:
Tel: 1-866-494-4599
Email: sales@gvs.com
Web: gvs-rpb.com

EXPLANATION OF MARKINGS

Helmet Label
Each T-Link has a label on the inside of the helmet shell with all relevant certification markings, important use and storage information, the serial number and date of manufacture.

Breathing Air Line (Supply Tube)
Each Breathing Air Line has a label with manufacturer information and date of manufacture, as well as being laser engraved on the tube.

Hood Label
Each hood has a label sewn onto it with warnings and relevant information.

EXPLANATION OF MARKINGS AND SYMBOLS ON THE EQUIPMENT


Read all instructions before use.


Danger of dust and fumes inhalation



Humidity range of storage conditions

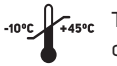

Temperature range of storage conditions

Protecting you for life's best moments.

PRODUCT USER SAFETY INSTRUCTIONS

BEFORE INITIAL USE - BE TRAINED AND MEDICALLY QUALIFIED

Do not use this respirator until you have read this manual and the PX5 PAPR or the flow control device Instruction Manual (additional copies available at gvs-rpb.com) and been trained in the respirator's use, maintenance, and limitations by a qualified individual (appointed by your employer) who is knowledgable about the GVS-RPB T-LINK Respirator.

Do not wear this respirator until you have passed a medical evaluation using a medical questionnaire or an initial medical examination by a qualified physician or other licensed health care professional (PLHCP).

Allergens: No known common allergens are used in this product.

Some materials could cause an allergic reaction in susceptible individuals. If you have a known allergy or develop irritation, inform your employer. Irritation may occur from lack of cleaning. Follow all cleaning and care instructions provided in the instruction manuals for this and any other GVS-RPB products you are using.

MAKE SURE THE SYSTEM IS READY FOR USE

Make sure you have a complete system. Verify that you have all required components for the T-LINK to serve as a complete approved respirator:

- Respirator Hood Assembly (T-LINK)
- Breathing Tube Assembly and Flow Control Device (SAR - Constant Flow Valve or C40 Climate Control Device, PAPR - PX5)
- Breathing Air Line (SAR)

See RESPIRATOR COMPONENT DIAGRAM (page 7-8). The GVS-RPB T-LINK is only approved to be used with the GVS-RPB PX5 PAPR, GVS-RPB C40 Climate Control Device, or the GVS-RPB Constant Flow Valve. Use only authentic GVS-RPB brand parts and components that are part of the approved respirator assembly. Using incomplete or inappropriate equipment, including the use of counterfeit or non-GVS-RPB parts, can result in inadequate protection and will void the approval of the entire respirator. Do not modify or alter any part of this product.

Inspect all components daily for signs of damage or wear and tear that may reduce the level of protection originally provided. Remove any damaged component or product, including any hood or helmet that has been subject to impact, from service until repaired or replaced. Scratched or damaged lenses or other components should be replaced with genuine GVS-RPB brand replacement parts. When the hood is replaced, make sure to remove any additional protective film from both sides of the lens. If the film is left in place, it could affect the optical clarity of the lens and cause eye strain. Inspect the inside of the respirator for respirable dust or other foreign objects. Keep the inside of the respirator clean at all times.

- T-LINK has a shelf life of 5 years from the date of manufacture.
- T-LINK has an in service life of 3 years from when first put into use.

Make sure that the helmet is correctly assembled in the configuration that suits your application.

An incomplete or improperly installed hood could provide inadequate impact and respiratory protection. *See RESPIRATOR SETUP AND CARE (page 16) See DONNING (page 24) for fit information.*

VERIFY THAT YOU HAVE THE APPROPRIATE EQUIPMENT FOR YOUR ACTIVITY

Verify that the T-LINK provides appropriate protection for your activity. As applicable, check your workplace safety program, respiratory protection program, and standards and regulations for your activity or industry. *(See PROTECTION PROVIDED AND LIMITATIONS, page 4.)*

BEFORE DONNING THE T-LINK®:

Verify airborne contaminants are within recommended limits for respirator use:

- Determine the type and level of contamination. Verify that airborne contaminant concentrations do not exceed those allowed by applicable regulations and recommendations for powered air purifying respirators or supplied air respirators.

Filtering the breathing air:

- **PAPR:** Once the contamination level has been confirmed, determine the correct filter cartridge to be used for the application, to make sure that you are sufficiently protected. Follow the PX5 PAPR Instruction Manual.
- **SAR:** Once the contamination levels have been confirmed, check to make sure the airline filter is working correctly. Follow the Radex Airline Filter Instruction Manual.

Make sure the area is ventilated and monitored:

- Make sure that the area is well ventilated and that regular air samples are taken to confirm the atmosphere stays within the levels recommended by the governing bodies. For Supplied Air, it is recommended to use a GX4 Gas Monitor. Follow the GX4 Gas Monitor Instruction Manual.

If you have any questions, ask your employer.

DO NOT ENTER THE WORK AREA if any of the following conditions exist:

- Atmosphere is immediately dangerous to life or health.
- You cannot escape without the aid of the respirator.
- Atmosphere contains less than 21% ±1% oxygen.
- A flammable or explosive atmosphere is present when used with systems including electrical parts that are not intrinsically safe, PX5, VISION-LINK, 16-922 COMMS-LINK, 09-913 PTT, or 18-534 SENA®.
- Contaminants are in excess of regulations or recommendations.
- Contaminants or contaminant concentrations are unknown.
- Work area is poorly ventilated.
- The temperature is outside the range of -10°C to +60°C (14°F to 140°F).

LEAVE THE WORK AREA IMMEDIATELY IF:

- Any product component becomes damaged.

PRODUCT USER SAFETY INSTRUCTIONS CONTINUED

- Vision is impaired.
- Airflow stops or slows down, or alarm sounds. Do not use Powered Air Purifying Respirators if airflow is less than 170 lpm (6 cfm).
- Breathing becomes difficult.
- You become dizzy, nauseous, too hot, too cold, or ill.
- Your eyes, nose, or skin become irritated.
- The work area is a confined space (unless proper measures are taken for confined spaces).
- You taste, smell, or see contaminants inside the helmet.
- You have any other reason to suspect that the respirator is not providing adequate protection .

PRODUCT CARE INSTRUCTIONS

Never place the helmet on hot surfaces. Do not apply paints, solvents, adhesives or self-adhesive labels except as instructed by GVS-RPB. This product may be adversely affected by certain chemicals.

Hoods are intended to be disposable. If washing is needed, hand wash only. It is recommended to establish a regular cleaning schedule for the padding to ensure good hygiene.

- Hoods: Hand wash only with mild detergent and warm water. Hang to dry. Do not launder in a washing machine or dryer. If laundered in a washer or dryer, product life will be reduced and warranty voided.
- Padding: Hand wash only with mild detergent and warm water. Lay flat to dry.

Do not run water or detergents inside of the breathing tube.

Make sure all components are dry before use. Inspect for wear and tear and replace if damaged or excessively worn.

See the "RESPIRATOR SETUP AND CARE" section (page 16) for more specific cleaning instructions.

INSTRUCTIONS FOR SPECIFIC USES OR ENVIRONMENTS

Confined Spaces

If this respirator is used in confined spaces, ensure the area is well ventilated and that all contaminant concentrations are below those recommended for this respirator. Follow all procedures for confined space entry, operation, and exit as defined in applicable regulations and standards.

⚠ WARNING **When connected to a mobile compressed air supply system it is recommended, but not required to be operated with an assistant. When using supplied air pay special attention to flow indicator warning device, and with PAPR, the audible and vibration warnings, especially when ear defenders or sound attenuating communications equipment is used, the reduction of the audibility of the warning shall be considered.**

BREATHING AIR PRESSURE TABLE

S - SPECIAL OR CRITICAL USERS INSTRUCTIONS - SAR *TABLE 1.3*

This table lists air pressure ranges needed to provide the GVS-RPB T-LINK with the volume of air that falls within the required range of 170-325 lts/min according to government regulations. Maximum working pressure of the compressed air supply tube is 20.7 BAR.

1. AIR SOURCE	2. AIR SUPPLY HOSE	3. FLOW CONTROL DEVICE USED WITH 04-835 BREATHING TUBE ASSEMBLY	4. SUPPLY HOSE LENGTH (METRES)	5. MAX NUMBER OF SECTIONS	6. PRESSURE RANGE (BAR)
PORTABLE OR STATIONARY COMPRESSOR	04-322-25 (7.5M) 04-322-50 (15M) 04-322-100 30M)	03-102 CONSTANT FLOW VALVE ASSEMBLY	7.5 15 30 45 60 75 90	1 1 1 2 2 3 3	0.65 - 0.75 0.77 - 0.87 0.97 - 1.07 1.17 - 1.27 1.45 - 1.60 1.70 - 1.85 1.90 - 2.05
		03-502 C40® CLIMATE CONTROL DEVICE ASSEMBLY	7.5 15 30 45 60 75 90	1 1 1 2 2 3 3	3.79 - 4.48 4.14 - 4.83 4.48 - 5.52 4.83 - 5.52 5.17 - 5.86 5.52 - 6.21 6.21 - 6.55

⚠ WARNING Make sure you understand the Breathing Air Pressure table before using this respirator.

1. Use the correct air source. Do not use an ambient air pump, as it does not supply enough pressure (column 1).
2. Confirm the part number of the air supply hose you are using (column 2) and the flow control device (column 3) you are using..
3. Check your GVS-RPB Breathing Air LIne is within the correct length (column 4) and the correct number of hose sections (column 5).
4. Set the air pressure at the point of attachment within the range specified (column 6).

Make sure air is flowing through your respirator when setting the air pressure.

Failure to supply the minimum required air pressure at the point of attachment for the length of air supply hose will decrease the level of protection provided. Check that the capacity of the air supply systems can provide sufficient air to all users, with a maximum of 5 users connected simultaneously per air supply unit. In addition, could result in contaminants being inhaled as the pressure in the helmet may become negative due to peak inhalation flow when working at very high work rates. Low airflow will decrease the level of protection provided.

ALWAYS WEAR EAR PLUGS WHEN WEARING THIS APPARATUS.

⚠ WARNING **The T-LINK Supplied Air Respirator must be supplied with respirable air meeting the requirements of EN 12021 (AS/NZS 1715) or higher quality and meets other governing body requirements. The moisture content of the breathable air should controlled within the limits in accordance with EN 12021, to avoid the air freezing the apparatus. Do not use oxygen enriched air.**

RESPIRATOR SETUP AND CARE

PLACING THE HELMET INTO THE HOOD

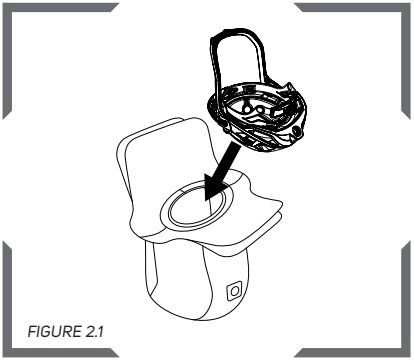

FIGURE 2.1

Insert the helmet into the hood with front of the Helmet towards the lens of the hood.

FIGURE 2.2

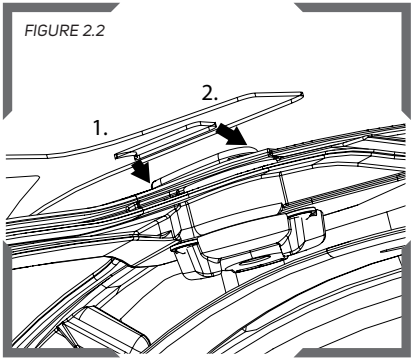

Line up the tabs of the lens with the clips on the sides of the helmet. 1. Slide the 1st side under the front side of the clip and slide back. 2. Snap the 2nd side of over the back of the clip.

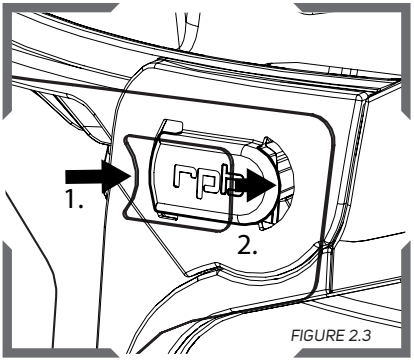

FIGURE 2.3

Do the same thing on the other side to fully secure the lens and the hood to the Helmet.

INSERTING THE BREATHING TUBE ADAPTOR TO RETROFIT OLDER MODELS

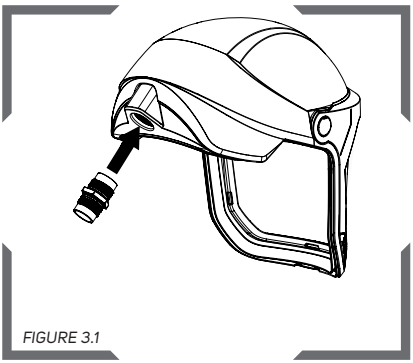

FIGURE 3.1

Without a hood on the T-LINK helmet assembly, insert the breathing tube adapter into the inlet of the T-LINK by threading it in until tight. A wrench may be required. Be careful not to over tighten and crack the inlet area of the T-LINK.

POWERED AIR

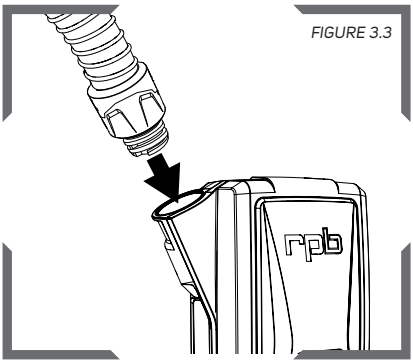

FIGURE 3.3

Insert the bayonet end of the breathing tube into the outlet of the PX5 PAPR and twist it in until it is secure.

ATTACH THE BREATHING TUBE

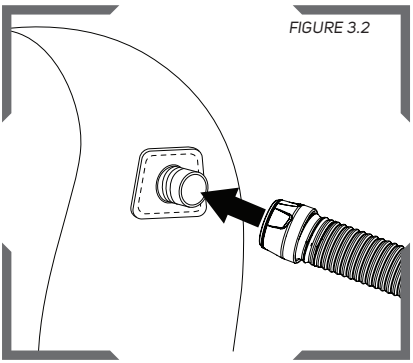

FIGURE 3.2

Install a the T-LINK hood. Line up the adaptor with the inlet seal. Attach breathing tube to the adaptor by screwing it on completely without over tightening. Be mindful of the hood to keep it from twisting as the breathing tube is tightened. Breathing Tube 04-831, 04-833 or 04-837 required.

FOR USE WITH GVS-RPB PX5 - SEE THE PAPR USER MANUAL

When the T-LINK Respirator is being used in conjunction with the PX5 PAPR, please refer to the PX5 Instruction Manual for set up and use of the assembly.

Note: The PX5 is a Powered Air Purifying Respirator, therefore care must be taken when selecting the correct filter for the application the respirator will be used in.

RESPIRATOR SETUP AND CARE CONTINUED

SUPPLIED AIR

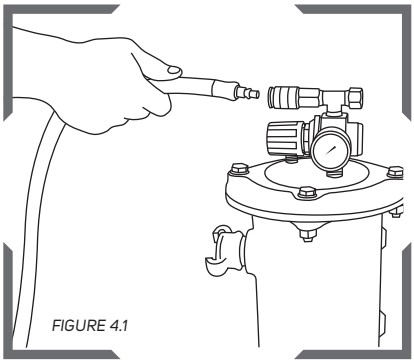

FIGURE 4.1

Connect the Breathing Air Supply Hose to the point of attachment (04-900 Radex Airline Filter) shown.

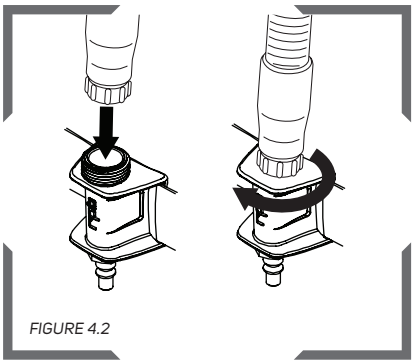

FIGURE 4.2

Connect the Breathing Tube to the flow control device.

NOTE: Check the hose connections for any air leaks and tighten if necessary – replace any worn parts.

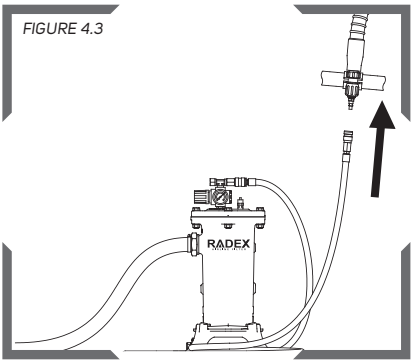

FIGURE 4.3

Now connect the Breathing Air Supply Hose to the Flow Control Device. Air should be now flowing through the Respirator.

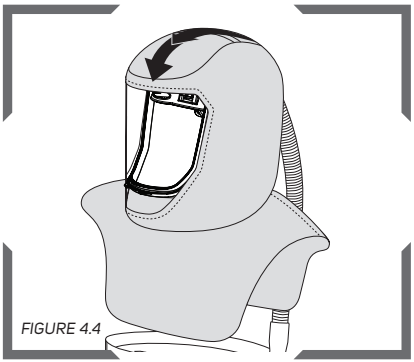

FIGURE 4.4

With air flowing through the respirator adjust the air pressure at the point of attachment to the recommended pressure as specified in the Breathing Air Pressure Table (page 14).

HEAD HARNESS ADJUSTMENT

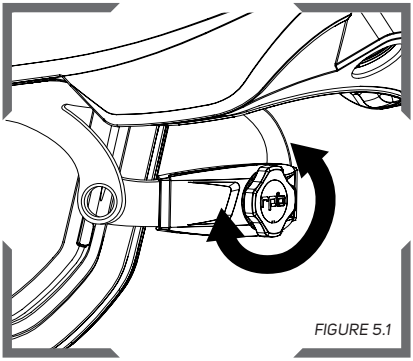

FIGURE 5.1

The head harness can be tightened or loosened using the ratchet knob on the back of the headband.

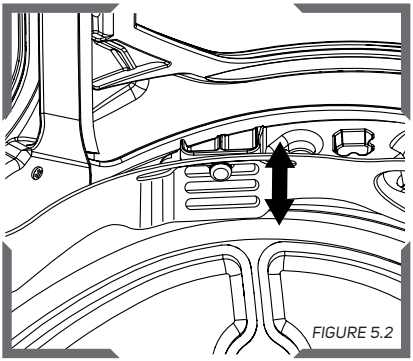

FIGURE 5.2

The height of the head harness can be adjusted at the four attachment points by switching which of the three slots is used.

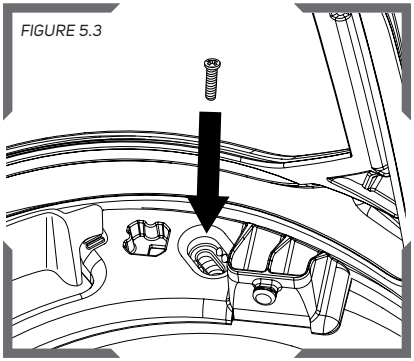

FIGURE 5.3

The position of the head harness can be adjusted by loosening the screws that hold the front bracket and sliding it forward or backwards into the desired slot. Once in position, tighten the screws.

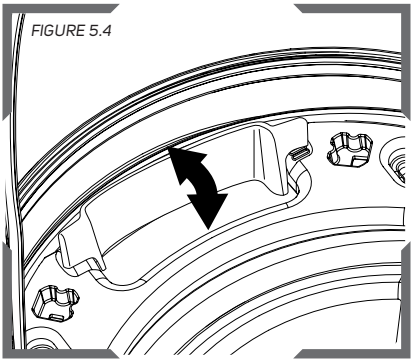

FIGURE 5.4

Airflow can be directed by positioning the air flow director so that the air flows more towards the visor or towards the face.

RESPIRATOR SETUP AND CARE CONTINUED

SIDE PADDING SYSTEM

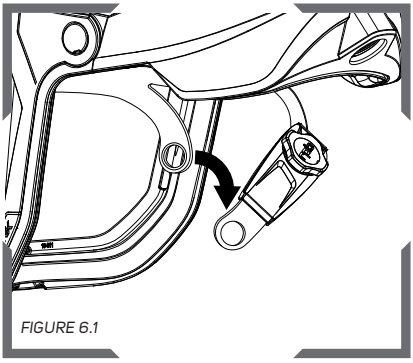

FIGURE 6.1

Detach the head harness ratchet at the pivot points.

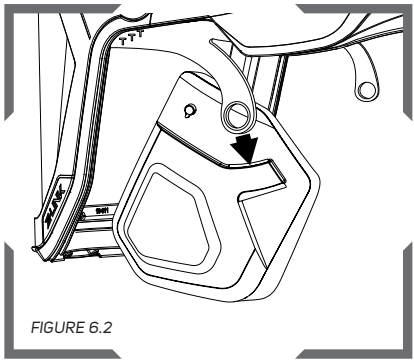

FIGURE 6.2

Slide the ends of the head harness into the slots on the side pad covers and reattach the head harness ratchet.

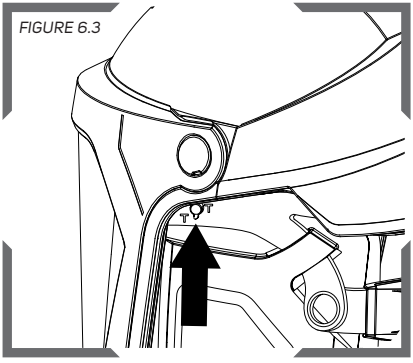

FIGURE 6.3

Slide the tab on the side pad covers into one of the three T-shaped slots in the head harness depending on the desired height of the side pads. Reinsert the ratchet pivot points.

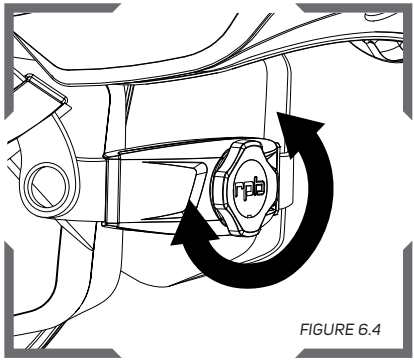

FIGURE 6.4

While wearing the T-LINK, tighten the ratchet adjustment until the helmet and side pads sit comfortably on the head and ears.

CLEAR-VISION CASSETTE LENSES

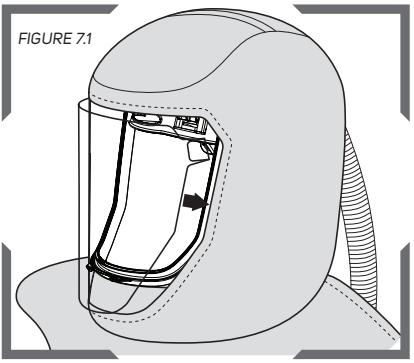

Peel off the backing of the cassette lenses and apply the lenses to the outside of the lens sewn into the hood.

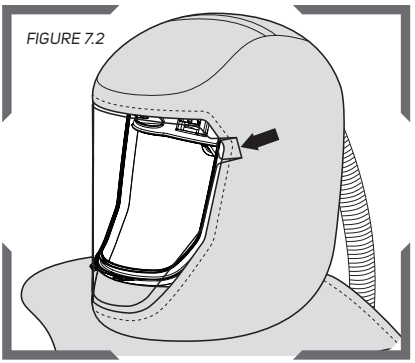

Use the folded over tabs to remove each lens as needed.

SIDE PADDING SYSTEM CLEANING AND DISINFECTING

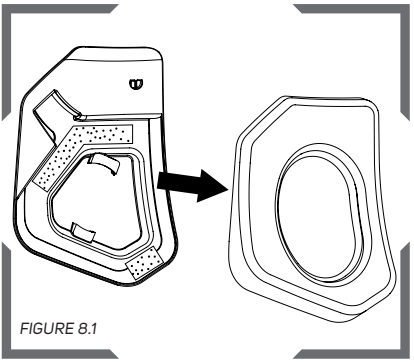

Remove the side pads from the covers that are attached with hook and loop.

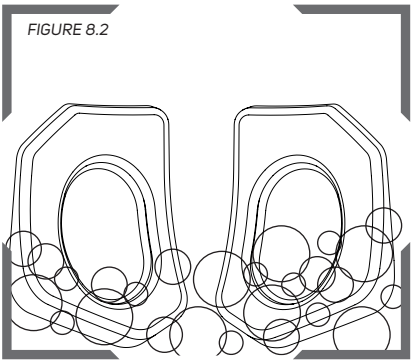

Wash the pads with mild detergent. Once dry, reattach them to the side pad covers.

RESPIRATOR SETUP AND CARE CONTINUED

BROW PAD REPLACEMENT AND CLEANING AND DISINFECTING

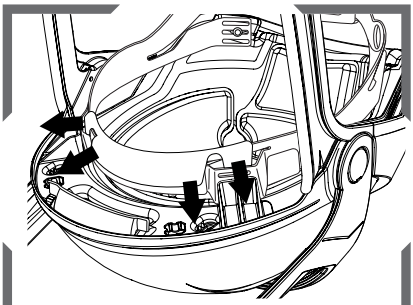

FIGURE 9.1

To remove the brow pad, undo the hook and loop tabs and take it off of the head harness. Clean it with mild detergent or replace it with a new one.

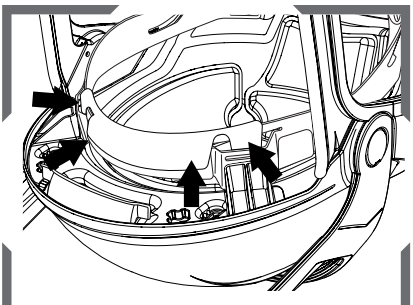

FIGURE 9.2

Replace the brow pad by wrapping the brow pad over the head harness with the flat side facing inwards. Stretch the pad around the head harness and secure the hook and loop tabs.

REPLACEMENT, CLEANING AND DISINFECTING INSIDE THE HELMET

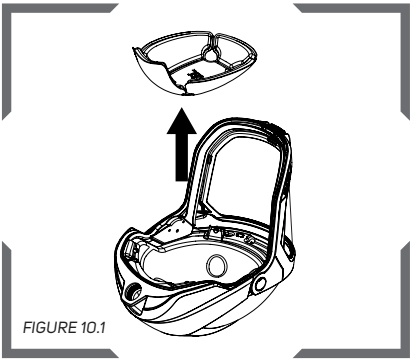

FIGURE 10.1

The comfort pad is attached to the inside of the Impact Liner with hook and loop. Pull the comfort pad out of the helmet.

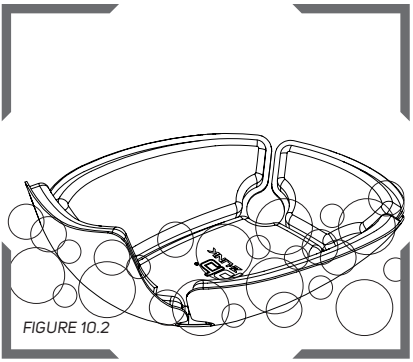

FIGURE 10.2

The comfort pad can be washed with mild detergent or replaced.

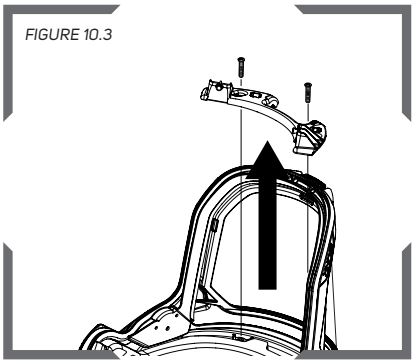

FIGURE 10.3

To remove the Impact Liner, remove the head harness bracket by removing the screws holding it in place.

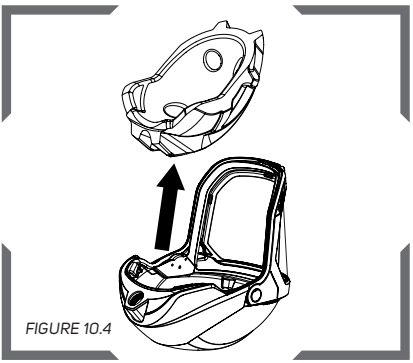

FIGURE 10.4

Rotate the Impact Liner out of the helmet shell. The inside of the shell can be washed with mild detergent or a cleaning wipe.

DONNING AND DOFFING

DONNING YOUR HELMET

Once you have completed the set up, you are ready to fit your GVS-RPB T-LINK Respirator. Firstly, check inside the hood and helmet to ensure that it is free of dust, dirt or contaminants. Then open the bottom of the cape or face seal, with the air flowing from the air source, put the respirator onto your head. Pull the hood down, tighten the head harness ratchet to fit, then make sure the neck seal is sealing around your neck. Tuck the inner bib in under you coveralls or other outer garment. Pull the outer bib down over your shoulders and make sure it is laying flat on your chest and back so that it does not get in the way of your work.

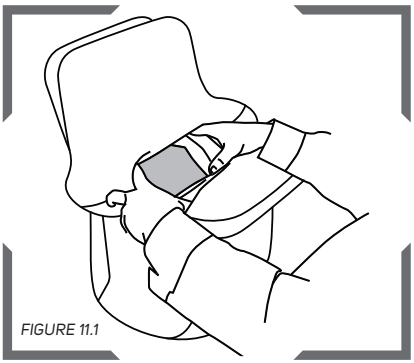

FIGURE 11.1

Open the bottom of the hood with the air flowing from the air source, put the respirator onto your head. Make sure the hood is centered on your head.

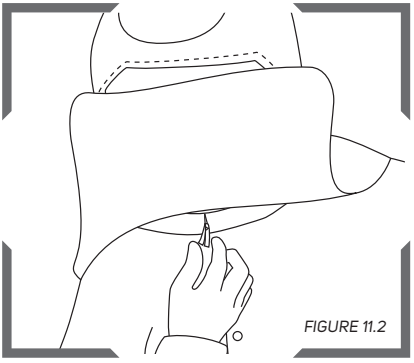

FIGURE 11.2

Pull the hood down, tighten the head harness ratchet to fit, and make sure the neck seal is sealing around your neck, making sure the elastic is tied securely.

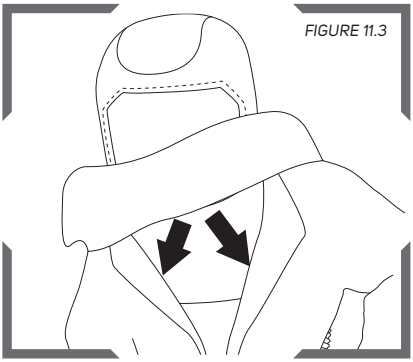

FIGURE 11.3

Tuck the inner bib into the collar of your shirt, coveralls, or protective gear to prevent contaminants from entering the hood. Pull the outer bib down.

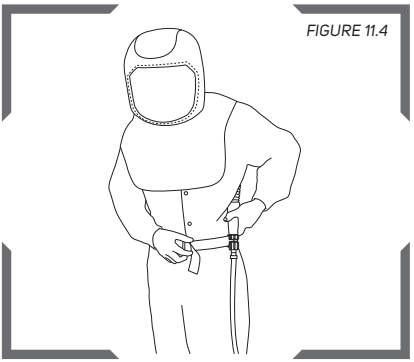

FIGURE 11.4

Fasten the flow control device belt around your waist over hip.

⚠ WARNING **Donning procedure shall be carried out strictly in accordance with the instructions in this manual. Always check the interior of the respirator for contaminants before donning. Always don and doff the helmet while outside the work area, keeping the interior of the helmet clean and free of contaminants. Not doing these steps could expose you to hazardous materials, and contaminants that could impair the function of the respirator.**

DOFFING YOUR HELMET

When you have finished working, keep the respirator on with air flowing into the helmet until you have left the contaminated area. Depending on the contaminants, it may be advisable to clean the exterior of the helmet and your work garments before removing the respirator. A workplace cleaning program may be necessary.

INSPECTION

If the hood is contaminated or show excessive wear, dispose of the hood according to federal and local regulations. Keep the helmet, breathing tube, and other parts for future use if they are in good condition.

STORAGE

Before storing the respirator, clean the unit following the cleaning instructions in this instruction manual. Be sure it is clean, both inside and out. After use, store the respirator by hanging it up in a clean, dry place, away from the work area. If the T-LINK isn't going to be used for a longer period of time or for transportation, it is recommended to store in a container or a bag. Store in a cool dry place between -10°C to +45°C (14°F to 113°F) <90%RH. PX5 may need to be stored separately, refer to the PX5 Instruction manual for specific storage instructions.

After use:

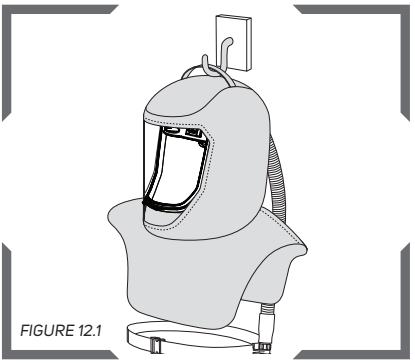

FIGURE 12.1

Long term storage or transportation:

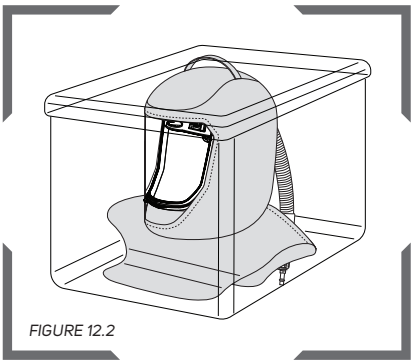

FIGURE 12.2

Protecting you for life's best moments.

COMMS-LINK™ INSTRUCTIONS

SET UP

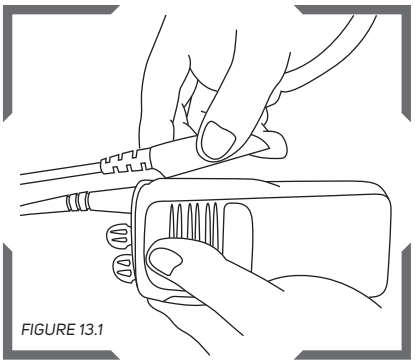

FIGURE 13.1

Connect the PTT Cable to the Hand Set depending on the type used.

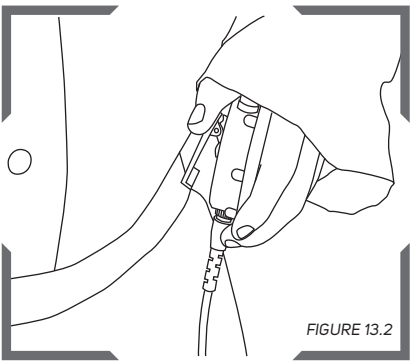

FIGURE 13.2

Attach the PTT to your belt so your elbow can activate the Button.

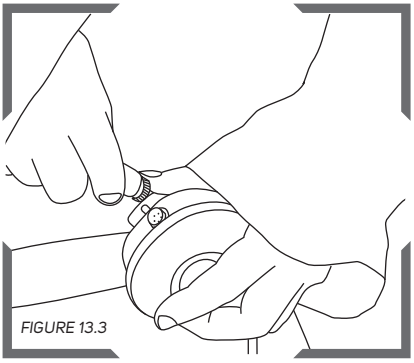

FIGURE 13.3

Connect the PTT cable to the head set cable and place the cable underneath the cape.

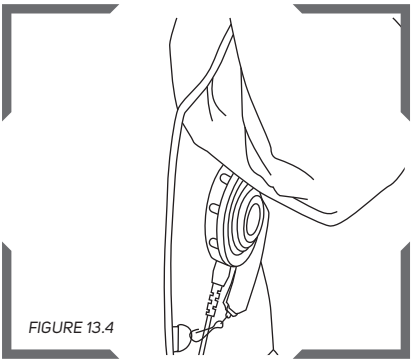

FIGURE 13.4

To operate the device, press your elbow onto the PTT Button, and then speak.

INSTALLATION

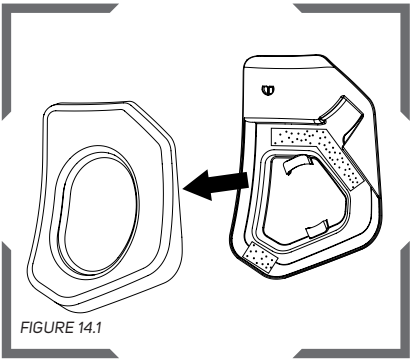

FIGURE 14.1

Remove the side pad from the cover that is attached with velcro on the side of the helmet that the Communication is to be installed. The Communication can be installed on either side of the helmet.

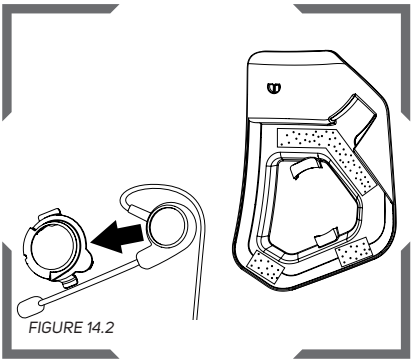

FIGURE 14.2

Place the Communication ear piece into the attachment clip. Then attach the Communication Clip into the slots on the inside of the cover.

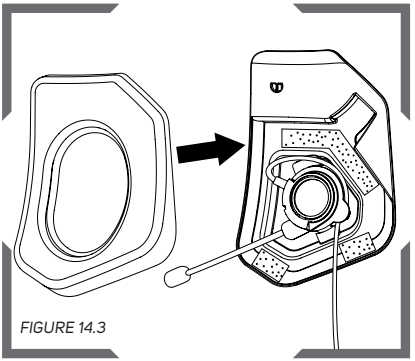

FIGURE 14.3

Attach the side pad back onto the cover over the Communication. Insert the side pad back into the helmet.

Protecting you for life's best moments.

RADIO CONNECTORS COMPATIBILITY

09-930

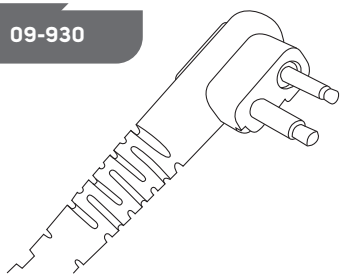

FIGURE 15.1

MOTOROLA
AXU4100, AXV5100, BPR40, CLS1110, CLS1410, CLS1413, CLS1450C, CLS1453C, CP100, CP150, CP185, CP200, CP88, CT125, CT150, CT250, CT450, CT450LS, DTR, DTR410, DTR550, DTR650, GP200, GP2000, GP300, GP308, GP68, GP88, GTI, GTX, LTS2000, P040, P080, P110, P1225, P1225LS, P200, P2000, PR400, RDK, RDU, RDU2020, RDU2080D, RDU4100, RDU4160D, RDV, RDV2020, RDV2080D, RDV5100, SP10, SP21, SP50, VL50, XTN, XTN446, XTN500, XTN600, XU1100, XU2100, XU2600, XV1100, XV2100, XV2600

RELM
RPU6500, RPV6500

09-931

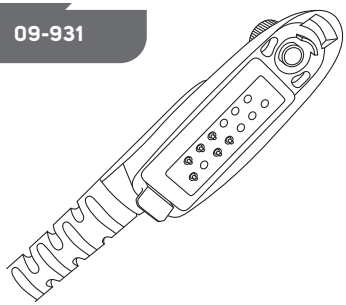

FIGURE 15.2

HYT
TC-980

MOTOROLA
CBPRO, GP1280, GP140, GP320, GP328, GP329, GP338, GP339, GP340, GP360, GP380, GP640, GP650, GP680, GP960, HT1250, HT1250LS, HT1550, HT1550XLS, HT750, JT1000, MTX8250, MTX8250LS, MTX850, MTX850LS, MTX9250, MTX950, PR860, PRO5150, PRO5350, PRO5450, PRO5550, PRO5750, PRO7150, PRO7350, PRO7450, PRO7550, PRO7750, PRO9150, PTX700, PTX760, PTX780

09-932

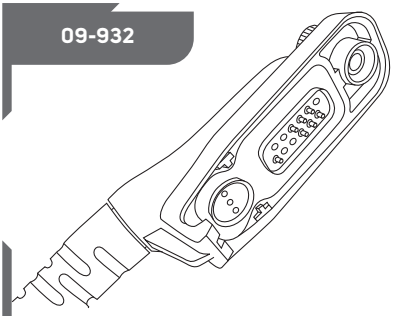

FIGURE 15.3

MOTOROLA
Turbo
APX 7000, XPR6300, XPR6500, XPR6550,
APX 7500, XPR6100, XPR6350, XPR6580

09-933

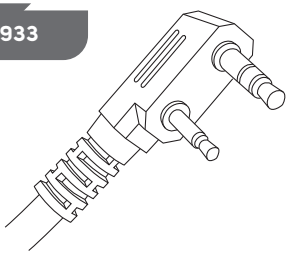

FIGURE 15.4

HYT
TC-268, TC-268S, TC-270, TC-368, TC-368S, TC-370

KENWOOD
TH-22AT, TH-235A, TH-28A, TH-42AT, TH-48A, TH-77A, TH-78A, TH-D7A(G), TH-F6, TH-F6A, TH-G71A, TH-K2AT, TK-208, TK-2100, TK-2102, TK-2130, TK-2160, TK-2170, TK-220, TK-2200, TK-2200LP, TK-2212L, TK-2302VK, TK-240, TK-240D, TK-248, TK-250, TK-260, TK-260D, TK-260G, TK-270, TK-270G, TK-272G, TK-308, TK-3100, TK-3101, TK-3102, TK-3130, TK-3131, TK-3160, TK-3170, TK-3173, TK-320, TK, 3200, TK-3200LP, TK-3212L, TK-3230, TK-3230XLS, TK-3302UK, TK-340, TK-340D, TK-348, TK-350, TK-353, TK-360, TK-360G, TK-370, TK-370G, TK-372G, TK-373, TK-430, TK-431, TK-2312, TK-3312

RELM
RPU416, RPU4200, RPU499, RPV4200, RPV516, RPV599X

09-934

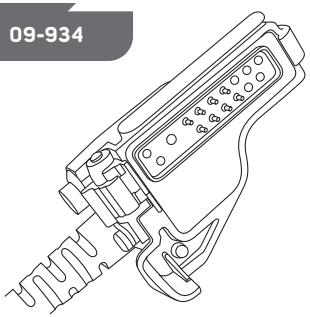

FIGURE 15.5

EF JOHNSON
51 SLES Series, 5100 Series, 511X, 512X, 514X, 518X, Ascend ES Series

MOTOROLA
GP900, GP9000, HT1000, MT1500, MT2000, MTS2000, MTX8000, MTX838, MTX900, MTX9000, MTX960, MTXLS, PRI500, X1500, XTS1500, XTS2000, XTS2500, XTS3000, XTS3500, XTS5000, GP1200

09-935

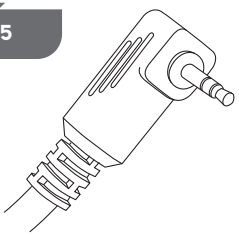

FIGURE 15.6

COBRA
CXR700, CXR800, CXR900, CXR920, CXT400, LI Series, LI3900, LI5600, LI6000, LI6500, LI6700, LI7000, LI7020, MRHH100, MRHH200, PR Series, PR190, PR240, PR245, PR3000, PR3100, PR3175, PR350, PR4000, PR4100, PR4250, PR4300, PR5000, PR560

HYT
TC-320

MOTOROLA
EM1000, FR50, FR60, FV300, FV300R, FV700R, FV750R, MH230R, MJ270R, MR350R, MR355R, SPIRITGT, SPIRITGT Plus, SX600R, SX900R, T270, T280, T289, T5100, T5200, T5300, T5320, T5400, T5410, T5420, T5500, T5600, T5620, T5700, T5710, T5720, T5800, T5820, T5920, T5950, T6200, T6210, T6220, T6250, T6300, T6320, T6400, T6500, T7200, T7400, T8500, T8550, T9500XLR, T9550XLR, T9580R, T9680R, T9750R, TalkAbout

Protecting you for life's best moments.

PARTS AND ACCESSORIES

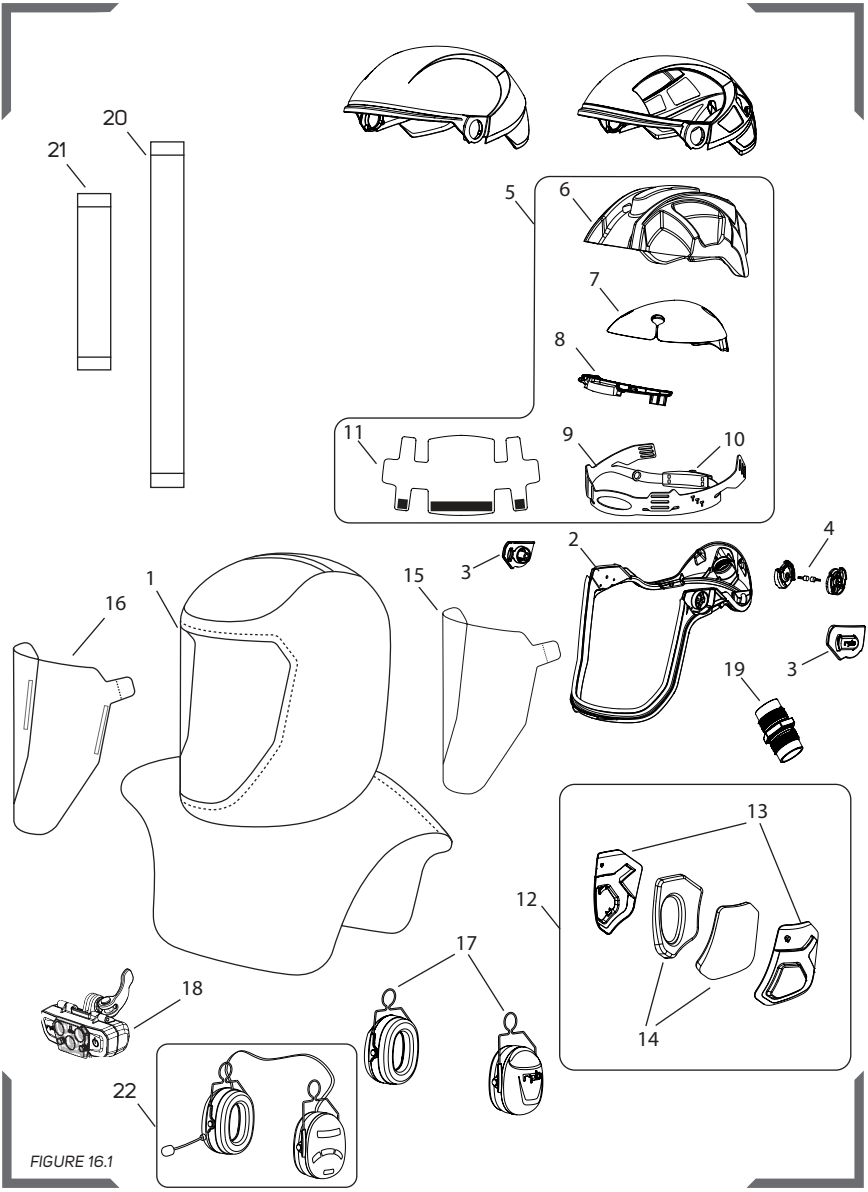

FIGURE 16.1

PARTS LIST

Item Number	Description	Part Number
1	T-LINK Tychem® 2000	17-712
	T-LINK Tychem® 4000 - Sealed Seams	17-713
	T-LINK Tychem® 4000 - Sealed Seams, Safety Lens	17-713-S
	T-LINK Tychem® 4000 - Sealed Seams, Safety Lens, Extra Long	17-713-SX
	T-LINK Zytec - Safety Lens	17-711
2	Jaw	16-514
3	Lens Clips (Left and Right Pair)	17-512
4	Mounting Brackets with screws	16-516
5	Comfort-Link (16-521, 522, 524, 525, 530, 531)	16-520-T
6	Impact Absorber	16-521
7	Comfort Pad	16-522
8	Head Harness Bracket and Air Director	16-525
9	Head Harness	16-531
10	Ratchet Adjuster Assembly	16-530
11	Head Harness Brow Pad	16-526
12	Side Padding System	16-520-S
13	Side Padding Frames	16-527
14	Foam Side Pads	16-528
15	T-LINK Clear-Vision Casette Lens (1 cassette of 7 lenses) (Pack of 10)	17-817
16	T-LINK Peel-Off Lenses (Pack of 25)	17-815
17	QUIET-LINK Helmet Earmuffs	18-533
18	VISION-LINK Light	16-901
19	Breathing Tube Adapter	16-519
20	FR Breathing Tube Cover	04-854
	Tychem® Breathing Tube Cover	04-852
	Clear Plastic Breathing Tube Cover (pack of 10)	04-856
21	FR Breathing Tube Cover for backpack	04-874
	Tychem® Breathing Tube Cover for backpack	04-872
22	SENA® Tufftalk M-02 - Helmet Mounted Communication Earmuffs	18-534

⚠ WARNING **Use only exact, authentic GVS-RPB replacement parts (marked with the GVS-RPB logo and part number), and only in the specified configuration. Using incomplete or inappropriate equipment, including the use of counterfeit or non-GVS-RPB parts, can result in inadequate protection and will void the approval of the entire respirator assembly.**

PAPR PARTS AND ACCESSORIES

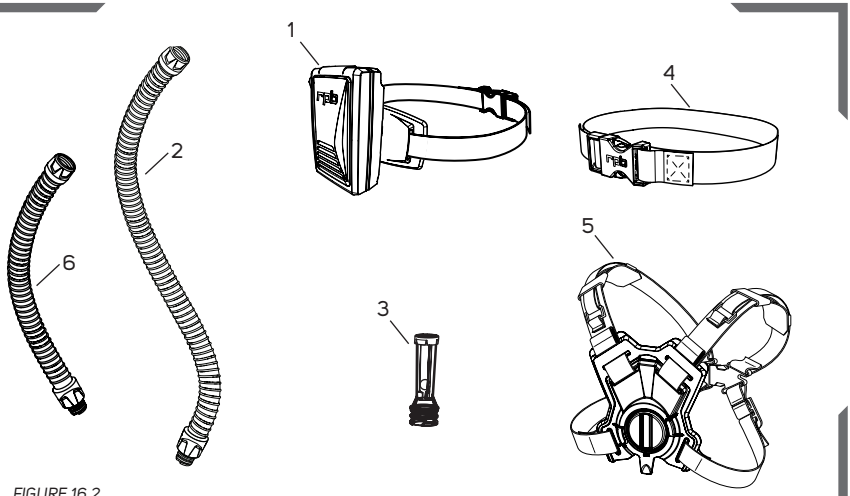

FIGURE 16.2

Item Number	Description	Part Number
1	PX5 PAPR and Belt	03-801
2	PAPR Breathing Tube	04-831
3	PAPR Flow Meter	03-819
4	2" Belt	07-765
	FR 2" Belt	07-765-FR
	Easy Clean 2" Belt	07-765-DC
5	FR Backpack Assembly	03-822-FR
	Easy Clean Backpack Assembly	03-822-DC
6	Short Breathing Tube for Backpack Assembly	04-841

FLOW CONTROL DEVICES

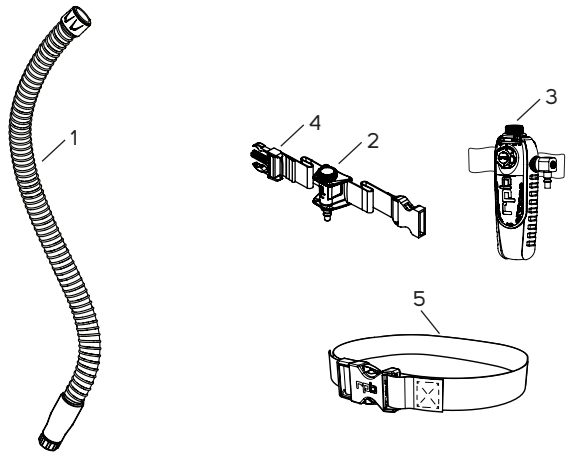

FIGURE 16.3

Item Number	Description	Part Number
1	SAR Breathing Tube	04-833
2	Constant Flow Valve Assembly and Belt	03-102
3	C40 Climate Control Assembly and Belt	03-502
4	Belt for Constant Flow Valve	NV2022
5	2" Belt for C40	07-765
	FR 2" Belt for C40	07-765-FR
	Easy Clean 2" Belt for C40	07-765-DC

GVS | rpb T-LINK®

Protecting you for life's best moments.

AIR SUPPLY HOSES AND FITTINGS *TABLE 2.1*

SERIES	1. COUPLERS	2. PLUGS	3. BREATHING AIR LINE ASSEMBLIES
RPB Quick Disconnect	03-022-CF CEJN Coupler 		04-322-25 RPB 7.5m (9.5mm) 04-322-50 RPB 15m (9.5mm) 04-322-100 RPB 30m (9.5mm)

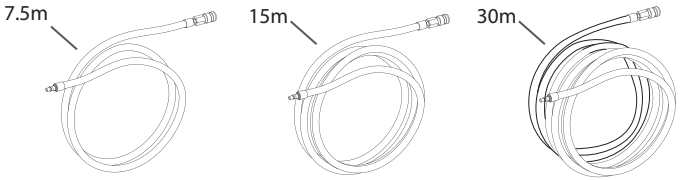

COMMS-LINK PARTS AND ACCESSORIES

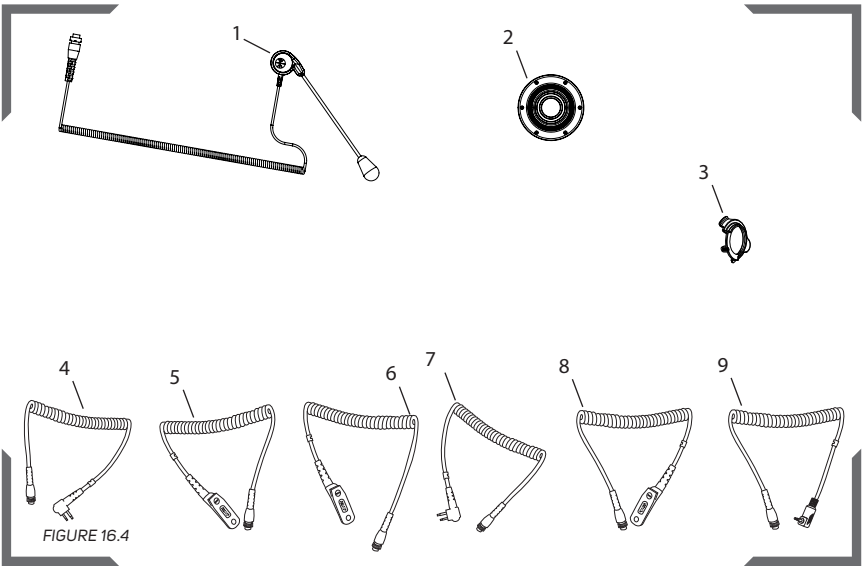

FIGURE 16.4

Item Number	Description	Part Number
1	Comms-Link Communication System - w/09-913	16-922
2	PTT	09-913
3	Comms-Link Clip	16-529
4	Two Pin	09-930
5	Multi Pin	09-931
6	Multi Pin	09-932
7	Two Pin	09-933
8	Multi Pin	09-934
9	One Pin	09-935

Other Radio Connectors may be available.

Protecting you for life's best moments.

LIMITED WARRANTY

RPB® warrants that its Products will be free from defects in materials and workmanship for one (1) year, subject to the terms of this limited warranty. The Products are sold only for commercial use, and no consumer warranties apply to the Products. This limited warranty is for the benefit of the original Product purchaser, and cannot be transferred or assigned. This is the sole and exclusive warranty provided by RPB®, and ALL CONDITIONS AND IMPLIED WARRANTIES (INCLUDING ANY WARRANTY OF MERCHANTABILITY OR FITNESS FOR A PARTICULAR PURPOSE) ARE EXCLUDED AND DISCLAIMED FROM WARRANTY COVERAGE. RPB's® limited warranty coverage does not apply to damage resulting from accident, improper use or misuse of the Products, wear and tear resulting from the normal use of the Products, or the failure to properly maintain the Products.

RPB's® limited warranty coverage runs from the original date of purchase of the Products, and applies only to warranted defects which first manifest themselves and are reported to RPB® within the warranty period. RPB® retains the right to determine to its reasonable satisfaction whether any claimed defect is covered by this limited warranty.

If a warranted defect occurs, RPB® will repair or replace the defective Product (or a component of the Product), in its sole discretion. This "repair or replacement" remedy is the sole and exclusive remedy under this limited warranty, and under no circumstances shall RPB's® liability under this limited warranty exceed the original purchase price for the Products (or the applicable component). RPB® has no responsibility for incidental or consequential damages, including loss of use, maintenance and other costs, and ALL INCIDENTAL AND CONSEQUENTIAL DAMAGES ARE EXCLUDED AND DISCLAIMED from this limited warranty. Contact RPB® to obtain warranty service. Proof of purchase must be provided to obtain warranty service. All costs of returning the Products to RPB® for warranty service must be paid by the purchaser.

RPB® reserves the right to improve its Products through changes in design or materials without being obligated to purchasers of previously manufactured Products.

LIABILITY

RPB® Safety cannot accept any liability of whatsoever nature arising directly or indirectly from the use or misuse of RPB® Safety products, including purposes that the products are not designed for. RPB® Safety is not liable for damage, loss or expense resulting from the failure to give advice or information or the giving of incorrect advice or information, whether or not due to RPB® Safety's negligence or that of its employees, agents or subcontractors.

NOTES

Protecting you for life's best moments.

NOTES

NOTES

ISO9001
CERTIFIED COMPANY

OTHER PRODUCTS

RPB® QUIET-LINK™ EAR DEFENDERS

The RPB® Quiet-Link™ ear defender system fits directly to the Z-LINK® and T-LINK® with no modifications. Combine with earplugs for the ultimate in hearing protection. Protect your hearing for Life's Best Moments.



SENA TUFFTALK M-02®

Providing in helmet noise protection and communications with mesh networking, hands-free communication, and cell phone connectivity. Designed to mount directly inside the helmet of the Z-LINK® and the T-LINK®.



RPB® PX5® PAPR

The RPB PX5 is a compact and versatile PAPR that changes the way people experience clean filtered air across multiple industries – from medical and chemical settings, to the profoundly harsh environments of foundries. Boasting a sleek lightweight design, the PX5 contours to the users back, evenly distributing weight through its vertical mounting. With simple considered edges, curves and sealed housing unit, the PX5 is certified to meet IP65 in use for ease of decontamination.



MAN-28

gvs-rpb.com | 1-866-494-4599

GVS | rpb

Protecting you for life's best moments.