Protecting you for life's best moments.

Instruction Manual
Astro™ Blasting Respirator

Employers: Read this manual and the flow control device instruction manual and carry out the employer responsibilities (page 8).

Product users: Read this manual and the flow control device instruction manual and follow the product user safety instructions (page 10).

Manuals are regularly updated. Make sure this manual is available to all users for reference.

Current version of manual and other languages: gvs-rpb.com/industrial/resources



EN English P. 2

CE 2797
UKCA 0086
EN14594:2018 4B
RESPIRATORY PROTECTION

PRODUCT CERTIFICATION
BSI Certified Product
AS/NZS 1716:2012
BMP# 714303
RESPIRATORY PROTECTION

GVS | rpb ASTRO™

Protecting you for life's best moments.

CONTENTS

- EXPLANATION OF SIGNAL WORDS AND SYMBOLS 2
- INTRODUCTION 3
- IMPORTANT SAFETY INFORMATION
  - PROTECTION PROVIDED AND LIMITATIONS 4
  - RESPIRATORY COMPONENT DIAGRAM - CAUTIONS & LIMITATIONS 6
  - AIR SOURCE, FITTINGS, AND PRESSURE 7
  - EMPLOYER RESPONSIBILITIES 8
  - PRODUCT USER SAFETY INSTRUCTIONS 10
  - BREATHING AIR PRESSURE TABLE 13
- RESPIRATOR SETUP AND CARE 15
- DONNING AND DOFFING 17
- INSPECTION AND CLEANING 19
- PARTS AND ACCESSORIES 21
- WARRANTY AND LIABILITY STATEMENT 24

EXPLANATION OF SIGNAL WORDS AND SYMBOLS

The following signal word and safety symbols are used in this manual and product labeling:

⚠ WARNING **WARNING** indicates a hazardous situation that, if not avoided, could result in death or serious injury.

⚠ DANGER **DANGER** Indicates a hazardous situation that, if not avoided, will result in death or serious injury.



Read the Instruction Manual.
Additional copies of GVS-RPB® manuals can be found at gvs-rpb.com.

CERTIFIED BY:

CE: BSI Group The Netherlands B.V. (NB2797), Say Building, John M. Keynesplein 9, 1066 EP, Amsterdam, NL

UKCA: BSI Group (AB0086), Kitemark Court, Knowhill, Milton Keynes MK5 8PP, United Kingdom

RPB® Safety LLC is an ISO9001 certified company.

INTRODUCTION

The GVS-RPB® ASTRO™ heavy industry respirator designed for abrasive blasting and other industrial applications. The ASTRO can increase productivity with the advanced tear-off lens system and other innovative features. The ASTRO is a Compressed Airline Breathing Apparatus tested to EN 14594 (AS/NZS 1716) - When used with RPB Breathing Air Line and Flow Control Device.

This product must be inspected and maintained in accordance with this instruction manual at all times.

See PROTECTION PROVIDED AND LIMITATIONS (page 4) for details.

RPB® SAFETY - GLOBAL HEADQUARTERS
2807 Samoset Rd, Royal Oak, MI 48073, USA
T: 1-866-494-4599 F: 1-866-494-4509 E: sales@gvs.com

RPB® SAFETY - APAC
3 Robin Mann Place, Christchurch Airport, Christchurch 8053, New Zealand
T: +64-3-357-1761 F: +64-3-357-1763 E: sales@gvs.com

GVS S.p.A. - EMEA
Via Roma 50, 40069 Zona Industriale BO, Italy
T: +39 0516176391 E: sales@gvs.com

GVS Filter Technology UK Ltd.
Vickers Industrial Estate, Mellishaw Ln, Morecambe LA3 3EN, UK
T: +44 (0)1524 847600 E: sales@gvs.com

gvs-rpb.com

Copyright ©2024 RPB IP, LLC. All rights reserved. All materials contained on this website are protected by United States copyright law and may not be reproduced, distributed, transmitted, displayed, published or broadcast without the prior written permission of RPB IP, LLC. You may not alter or remove any trademark, copyright or other notice from copies of the content.

All trademarks, service marks, and logos used in this publication, both registered and unregistered, are the trademarks, service marks, or logos of their respective owners. The green and gray color combination is a registered trademark of RPB IP, LLC. All rights in the RPB Intellectual Property contained in this publication, including copyright, trademarks, service marks, trade secret, and patent rights are reserved. RPB Intellectual Property means any patent, patented articles, patent applications, designs, industrial designs, copyrights, software, source code, database rights, moral rights, inventions, techniques, technical data, trade secrets, know-how, brands, trademarks, trade names, slogans, logos, and any other common law and proprietary rights, whether registered or unregistered anywhere in the world, that are owned by, developed in whole or in part by, or licensed by RPB IP, LLC.

For technical assistance contact our Customer Service Department at 1-866-494-4599 or email: sales@gvs.com

Form #: 7.20.502 Rev: 12

GVS | rpb ASTRO™

Protecting you for life's best moments.

IMPORTANT SAFETY INFORMATION

⚠ WARNING Improper selection, fit, use, or maintenance of this product can result in injury; life threatening delayed lung, skin or eye disease; or death.

This product is intended for occupational use in accordance with applicable standards or regulations for your location, industry, and activity (see Employer Responsibilities, page 8). Familiarity with standards and regulations related to the use of this protective equipment is recommended, even if they do not directly apply to you. If self-employed or if used in a non-occupational setting, refer to Employer Responsibilities and Product User Safety Instructions. Go to gvs-rpb.com/industrial/important-safety-information for helpful links to CE standards and other content.

Employers: Read this manual and the air supply device Instruction Manual and carry out the Employer Responsibilities (page 8).

Product users: Read this manual and the air supply device Instruction Manual and follow the Product User Safety Instructions (page 10).

Check website for updates. Product manuals are regularly updated.
Visit gvs-rpb.com/industrial/resources for the most recent version of this manual before using the product.

PROTECTION PROVIDED AND LIMITATIONS

RESPIRATION

The GVS-RPB ASTRO is approved in the category as follows:

Supplied Air

The GVS-RPB ASTRO respirator, when properly fitted and used with all required components, including the Breathing Tube Assembly, Flow Control Device, and GVS-RPB Breathing Air Line is an EN 14594 approved respirator with an Assigned Protection Factor of 40 (Nominal Protection Factor of 1000). As such, it significantly reduces, but does not completely eliminate, the breathing of contaminates by the respirator wearer. Use with an airline filter, such as the 04-900 GVS-RPB RADEX® Airline Filter. Specific protection depends on the setup of the airline filter (see the GVS-RPB RADEX Instruction Manual). This respirator is approved with the 03-102 Constant Flow Valve.

HAZARD LIMITATIONS

The GVS-RPB ASTRO Respirator is **NOT FOR USE** if:

- In atmospheres immediately dangerous to life or health (IDLH).
- Wearer cannot escape without the aid of the respirator.
- Atmosphere contains less than 21% ±1% oxygen.
- For protection against hazardous gases (e.g., carbon monoxide).
- Contaminants are in excess of regulations or recommendations.
- Contaminants or contaminant concentrations are unknown.

- Work area is poorly ventilated.
- The temperature is outside the range of -10°C to +60°C (14°F to 140°F).

FACE AND EYES:

- The ASTRO respirator with Inner Lens DOES NOT meet EN 166:2001 (AS/NZS 1337.1:2010) requirements.
- The ASTRO is not designed or tested to provide protection against molten metals or corrosive liquids.
- **Note:** Safety glasses may be required to be worn depending on the job hazard analysis. The ASTRO does not protect against the potential transfer of impact to glasses worn underneath the Visor. It does not provide complete eye and face protection against severe impact and penetration and is not a substitute for good safety practices and engineering controls.

HEAD:

- The ASTRO DOES NOT meet EN 397:2012+A1:2012 (AS/NZS 1801:1997) requirements for physical head protection as a hard hat. The helmet is design to provide limited head protection by reducing the force of falling objects striking the top of the head. Ensure the helmet is adjusted to properly fit the user by adjusting the head harness and side pads.

HEARING:

- Hearing protection must be worn and properly fitted when exposed to noise levels that exceed the permissible exposure levels. It is recommended to wear additional protection under the respirator, such as a pair of Foam or Silicon Earplug with an SNR 25 rating or higher.

PPE REGULATION:

- The ASTRO conforms to the PPE Regulation (EU) 2016/425. Regulation 2016/425 on PPE as brought into UK Law and amended.
- The Declaration of Conformity for CE and UKCA can be found at gvs-rpb.com/industrial/resources
- See the Storage section for information on packaging and protection required for transportation.

RESPIRATOR COMPONENT CONCEPT

The GVS-RPB ASTRO Respirator consists of three main components: Respirator Helmet Assembly, Breathing Tube Assembly, And Air Supply Hose. All three components must be present and properly assembled to constitute a complete EN 14594 (AS/NZS 1716) approved Respirator.

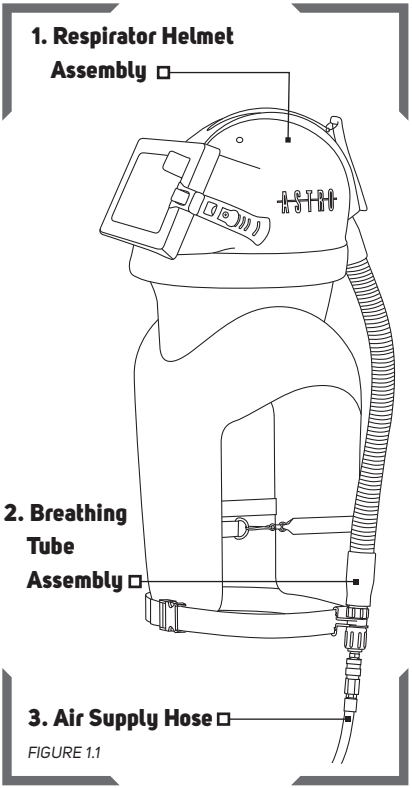

FIGURE 1.1

CAUTIONS AND LIMITATIONS

A Not for use in atmospheres containing less than 21% ±1% oxygen.

B Not for use in atmospheres immediately dangerous to life or health.

C Do not exceed maximum use concentrations established by regulatory standards

D Air-line respirators can be used only when the respirators are supplied with respirable air meeting the requirements of EN 12021 (AS/NZS 1715) or higher quality.

E Use only the pressure ranges and hose lengths specified in the user's instructions

J Failure to properly use and maintain this product could result in injury or death.

M All approved respirators shall be selected, fitted, used and maintained in accordance with local government and other applicable regulations.

N Never substitute, modify, add or omit parts. Use only exact replacement parts in the configuration as specified by the manufacturer.

O Refer to user's instructions, and/or maintenance manuals for information on use and maintenance of these respirators.

S Special or critical user's instructions and/or specific limitations apply. Refer to user's Instruction page 13 (Breathing Air Pressure Table) before donning.

AIR SOURCE, FITTINGS, AND PRESSURE

AIR SOURCE

Supplied Air

Locate the air source in a clean air environment, always use a filter on the inlet of your air source. Make sure the air source is somewhere that vehicles, forklifts, and other machinery are not running near the air inlet, as this will cause carbon monoxide to be drawn into your air supply. Always use suitable after coolers/dryers with filters and carbon monoxide alarms to ensure clean breathable air is supplied at all times. A Radex Airline Filter (04-900) and a GX4® Gas Monitor (08-400) are recommended. The air should be regularly sampled to ensure that it meets EN 12021 and AS/NZS 1715 requirements.

AIR QUALITY

This respirator must be supplied with clean breathable air at all times. Breathable air must at least meet the requirements for EN 12021 and AS/NZS 1715. The GVS-RPB ASTRO does not purify air or filter contaminants. A carbon monoxide monitor must be used at all times.

⚠ DANGER Do not connect the respirator's air supply hose to nitrogen, toxic gases, inert gases or other non-breathable air sources. Check the air source before using the respirator. This apparatus is not designed for use with mobile air supply systems e.g. cylinders. Connecting the supply hose to a non-breathable air source will result in serious injury or death.

BREATHING AIR SUPPLY HOSES AND FITTINGS

RPB breathing air supply hoses and fittings must be used between the point of attachment and the respirator breathing air connection at the wearer's belt. The hose sections must be within the correct length and the amount of sections must be within the number specified in the breathing air pressure table on pages 13.

BREATHING AIR PRESSURE

The air pressure must be continually monitored at the point of attachment. Air pressure must be read from a reliable pressure gauge whilst the respirator has air flowing through it.

EMPLOYER RESPONSIBILITIES

Your specific responsibilities may vary by location and industry, but in general GVS-RPB expects that employers will:

- **Follow all applicable standards and regulations for your location, industry, and activity.** Depending on your location and industry, a number of standards and regulations may apply to your selection and use of respirators and other personal protective equipment. These may include such things as national, local, or military standards and regulations and consensus standards such as CE and AS/NZS. There are also requirements specific to particular contaminants, e.g. silica (see gvs-rpb.com/industrial/important-safety-information for more information), asbestos, organic pathogens, etc. Know which requirements apply to your location and industry.

- **Have appropriate safety programs in place.**
  Have and follow:
  - ☐ A workplace safety program.
  - ☐ A written respiratory protection program in accordance with applicable standards and regulations.

- **In accordance with the above**,
  - ☐ **Perform a hazard analysis and select appropriate equipment for each activity.** A hazard analysis should be performed by a qualified person. Controls should be in place as appropriate and a qualified person should determine what kind of respiratory, face and eye, head, and hearing protection is appropriate for the intended activities and environments of use. (For example, select a respirator appropriate to the specific airborne hazards, with consideration of workplace and user factors and with an Assigned Protection Factor (APF) that meets or exceeds the required level for employee protection.

    As applicable, check your workplace safety program, respiratory protection program, and standards and regulations for your activity or industry for related protection requirements, and see this manual (Protection Provided and Limitations, page 4) and the flow control device Instruction Manual for product specifications.

  - ☐ **Be sure employees are medically qualified to use a respirator.**
    Have a qualified physician or other licensed health care professional (PLHCP) perform medical evaluations using a medical questionnaire or an initial medical examination.

  - ☐ **Train employees in the ASTRO's use, maintenance, and limitations.**

    Appoint a qualified individual who is knowledgable about the GVS-RPB ASTRO to provide training:

    Qualifications of the Respirator Trainer. Anyone providing respirator training shall:
    a) be knowledgable in the application and use of the respirator(s);
    b) have practical knowledge in the selection and use of respirator(s) and work practices at the site;
    c) have an understanding of the site's respirator program; and
    d) be knowledgable of applicable regulations.

Train each ASTRO user in the product's use, application, inspection, maintenance, storage, fitting, and limitations in accordance with the content of this Instruction Manual and the approved flow control device instruction manual and standard or regulatory requirements. Ensure that each intended user reads both these manuals.

☐ **Ensure that equipment is properly set up, used, and maintained.**
Make sure that equipment is properly set up, inspected, fitted, used, and maintained, including selection of the appropriate air filter cartridge and, when applicable, welding filter shade adjustments, for the application.

☐ **Measure and monitor airborne contaminants in the work area.**
Measure and monitor airborne contaminant levels in the work area in accordance with applicable requirements. Make sure work area is well ventilated.

☐ **Ensure abrasive is used that is suitable for abrasive blasting.**
Check the material safety data sheets for manufacturers warnings and recommendations and verify the blasting media conforms with applicable standards/regulations (e.g. regarding respirable silica). Refer to gvs-rpb.com/industrial/important-safety-information for links to websites that can provide regulatory guidance.

☐ **If you have any questions, contact GVS-RPB.**
- Call Customer Service Department:
  Tel: 1-866-494-4599
  Email: sales@gvs.com
  Web: gvs-rpb.com

GVS | rpb ASTRO™

Protecting you for life's best moments.

PRODUCT USER SAFETY INSTRUCTIONS

BEFORE INITIAL USE - BE TRAINED AND MEDICALLY QUALIFIED

Do not use this respirator until you have read this manual and the flow control device Instruction Manual (additional copies available at gvs-rpb.com/industrial/resources) and been trained in the respirator's use, maintenance, and limitations by a qualified individual (appointed by your employer) who is knowledgable about the GVS-RPB ASTRO respirator.

Do not wear this respirator until you have passed a medical evaluation using a medical questionnaire or an initial medical examination by a qualified physician or other licensed health care professional (PLHCP).

Allergens: No known common allergens are used in this product.

Some materials could cause an allergic reaction in susceptible individuals. If you have a known allergy or develop irritation, inform your employer. Irritation may occur from lack of cleaning. Following all cleaning and care instructions provided in the instruction manuals for this and any other GVS-RPB products you are using.

MAKE SURE THE SYSTEM IS READY FOR USE

Make sure you have a complete system. Verify that you have all required components for the ASTRO to serve as a complete approved respirator:

- Respirator Helmet Assembly (ASTRO)
- Breathing Tube Assembly
- Flow Control Device (Constant Flow Valve)
- Breathing Air Line

See Respirator Component Diagram (page 6). The GVS-RPB ASTRO is only approved to be used with the GVS-RPB Constant Flow Valve. Use only authentic GVS-RPB brand parts and components that are part of the approved respirator assembly. Using incomplete or inappropriate equipment, including the use of counterfeit or non-GVS-RPB parts, can result in inadequate protection and will void the approval of the entire respirator. Do not modify or alter any part of this product.

Inspect all components daily for signs of damage or wear and tear that may reduce the level of protection originally provided. Remove any damaged component or product, including any helmet or visor that has been subject to impact, from service until repaired or replaced. Scratched or damaged safety lenses or other components should be replaced with genuine RPB brand replacement parts. When safety and impact lenses are replaced, make sure to remove any additional protective film from both sides of the lens. If the film is left in place, it could affect the optical clarity of the lens and cause eye strain. Inspect the inside of the respirator for respirable dust or other foreign objects. Keep the inside of the respirator clean at all times.

Make sure that the helmet is correctly assembled in the configuration that suits your application. Never use the respirator without all lenses in place. This includes the Inner and Outer Lenses. These lenses, when installed properly, are part of the respiratory seal to prevent toxic or hazardous gases, liquids or dust from entering the helmet. An incomplete or improperly installed

lens system could provide inadequate impact and respiratory protection. *See Respirator Setup and Care (page 15). See Donning (page 17) for fit information.*

VERIFY THAT YOU HAVE THE APPROPRIATE EQUIPMENT FOR YOUR ACTIVITY

Verify that the ASTRO provides appropriate protection for your activity. As applicable, check your workplace safety program, respiratory protection program, and standards and regulations for your activity or industry. (See PROTECTION PROVIDED AND LIMITATIONS, page 4.)

BEFORE DONNING THE ASTRO:

Verify airborne contaminants are within recommended limits for respirator use:

- Determine the type and level of contamination. Verify that airborne contaminant concentrations do not exceed those allowed by applicable government regulations and recommendations for powered air purifying respirators or supplied air respirators.

Filtering the breathing air:

- **Supplied Air Respirator:** Once the contamination levels have been confirmed, check to make sure the airline filter is working correctly. Follow the Radex Airline Filter Instruction Manual.

Make sure the area is ventilated and monitored:

- Make sure that the area is well ventilated and that regular air samples are taken to confirm the atmosphere stays within the levels recommended by OSHA and other governing bodies. For Supplied Air, it is recommended to use a GX4® Gas Monitor. Follow the GX4 Gas Monitor Instruction Manual.

If you have any questions, ask your employer.

DO NOT ENTER THE WORK AREA if any of the following conditions exist:

- Atmosphere is immediately dangerous to life or health.
- You cannot escape without the aid of the respirator.
- Atmosphere contains less than 20% oxygen.
- Contaminants are in excess of regulations or recommendations.
- Contaminants or contaminant concentrations are unknown.
- Work area is poorly ventilated.
- The work area is a confined space (unless proper measures are taken for confined spaces).
- The temperature is outside the range of -10°C to +60°C (14°F to 140°F).

LEAVE THE WORK AREA IMMEDIATELY IF:

- Any product component becomes damaged.
- Vision is impaired.
- Airflow stops or slows down.
- Breathing becomes difficult.
- You become dizzy, nauseous, too hot, too cold, or ill.
- Your eyes, nose, or skin become irritated.
- You taste, smell, or see contaminants inside the helmet.

PRODUCT USER SAFETY INSTRUCTIONS CONTINUED

■ You have any other reason to suspect that the respirator is not providing adequate protection.

PRODUCT CARE

Never place the helmet on hot surfaces. Do not apply paints, solvents, adhesives or self-adhesive labels except as instructed by GVS-RPB. This product may be adversely affected by certain chemicals.

Clean and disinfect with warm water and mild detergent or a disinfecting wipe. See the "Respirator Setup and Use" section for more specific cleaning instructions.

INSTRUCTIONS FOR SPECIFIC USES OR ENVIRONMENTS

Confined Spaces

If this respirator is used in confined spaces, ensure the area is well ventilated and that all contaminant concentrations are below those recommended for this respirator. Follow all procedures for confined space entry, operation, and exit as defined in applicable regulations and standards.

Abrasive Blasting

Do not use hazardous abrasives (e.g. those that violate applicable standards/regulations, such as abrasives containing more than trace amounts of silica, lead, arsenic, etc.) - these could result in serious injury or death. Consult your abrasive supplier and read the material safety data sheets for the abrasives to be used to determine suitability for blasting applications.

EXPLANATION OF MARKINGS

Helmet Label

Each ASTRO has a label on the inside of the helmet shell with all relevant certification markings, important use and storage information, the serial number and date of manufacture.

Breathing Air Line (Supply Tube)

Each Breathing Air Line has a label with manufacturer information and date of manufacture, as well as being laser engraved on the tube.

Cape Label

Each cape has a label sewn onto it with the abrasive blasting pictogram, along with warnings and relevant information.

BREATHING AIR PRESSURE TABLE

S - SPECIAL OR CRITICAL USERS INSTRUCTIONS - SAR *TABLE 1.1*

This table lists air pressure ranges needed to provide the GVS-RPB ASTRO with the volume of air that falls within the required range of 6-15cfm or 170-425 lts/min according to government regulations. Maximum working pressure of the compressed air supply tube is 20.7 BAR.

1. AIR SOURCE	2. AIR SUPPLY HOSE	3. FLOW CONTROL DEVICES NV2021B BREATHING TUBE ASSEMBLY	4. SUPPLY HOSE LENGTH (METERS)	5. MAX NUMBER OF SECTIONS	6. PRESSURE RANGE (BAR AIR)
PORTABLE OR STATIONARY COMPRESSOR	04-322-25 (7.5M) 04-322-50 (15M) 04-322-100 30M)	03-102 CONSTANT FLOW VALVE ASSEMBLY	7.5 15 30 45 60 75 90	1 1 2 3 4 5 6	0.65 - 070 0.75 - 0.80 0.90 - 0.95 1.10 - 1.15 1.25 - 1.30 1.45 - 1.50 1.60 - 1.65

⚠ WARNING Make sure you understand the Breathing Air Pressure table before using this respirator.

1. Select the correct air source (column 1).
2. Confirm the part number of the air supply hose you are using (column 2) and the flow control device (column 3) you are using.
3. Check your GVS-RPB Air Supply Hose is within the correct length (column 4) and the correct number of hose sections (column 5).
4. Set the air pressure at the point of attachment within the range specified (column 6).

Make sure air is flowing through your respirator when setting the air pressure.

Failure to supply the minimum required air pressure at the point of attachment for the length of air supply hose will decrease the level of protection provided. Check that the capacity of the air supply systems can provide sufficient air to all users, with a maximum of 5 users connected simultaneously per air supply unit. In addition, could result in contaminants being inhaled as the pressure in the helmet may become negative due to peak inhalation flow when working at very high work rates. Low airflow will decrease the level of protection provided.

⚠ WARNING **The Apparatus must be supplied with respirable air meeting the requirements of EN 12021, AS/NZS 1715 or Higher Quality. The moisture content of the breathable air should controlled within the limits in accordance with EN 12021, to avoid the air freezing the apparatus. Do not use oxygen enriched air.**

RESPIRATOR SETUP AND CARE

FLOW CONTROL DEVICE

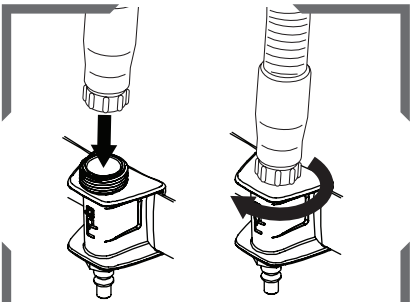

FIGURE 2.1

Connect the Air Supply Hose to the flow control device.

Note: Check the hose connections for any air leaks and tighten if necessary - replace any worn parts.

LENSES

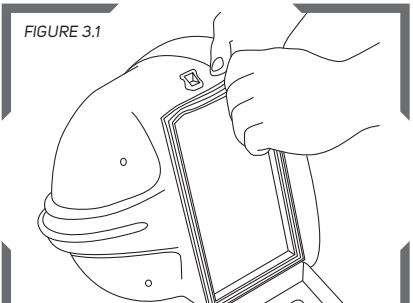

FIGURE 3.1

Inner Lens

Place one end into the gasket first, then slowly roll the gasket over the sides of the lens, working towards the other end.

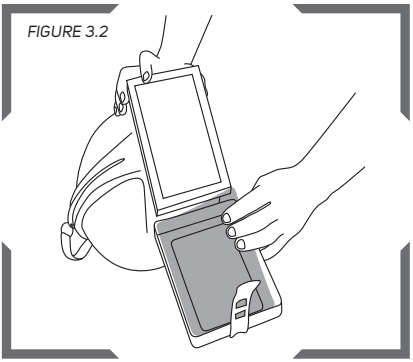

FIGURE 3.2

Outer Lens

Place the lens into the face frame and push past the locating ribs.

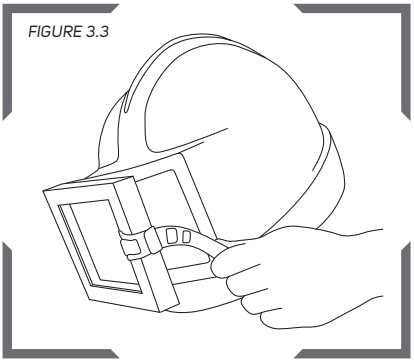

FIGURE 3.3

Fold the visor across the front of the helmet and lock the strap tightly over the side cleat.

NOTE

Always make sure that a GVS-RPB inner lens is securely fitted into the window frame gasket. Proceed fitting lenses as Fig 3.1, Fig 3.2, Fig 3.3.

VISOR REPLACEMENT

FIGURE 3.4

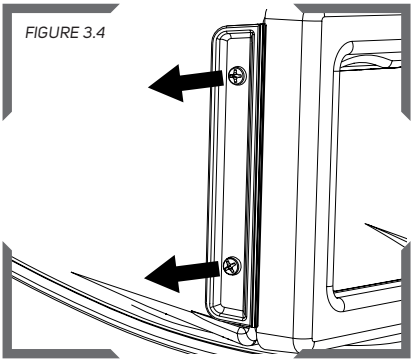

Remove the old visor by removing the screws and nuts holding on the visor.

FIGURE 3.5

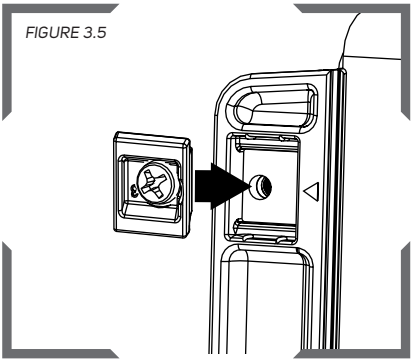

To install the replacement visor with a standard lens, place the visor onto the helmet and insert the attachment spacers with "3" upside-down and then insert the screws with the nuts on the inside of the helmet.

FIGURE 3.6

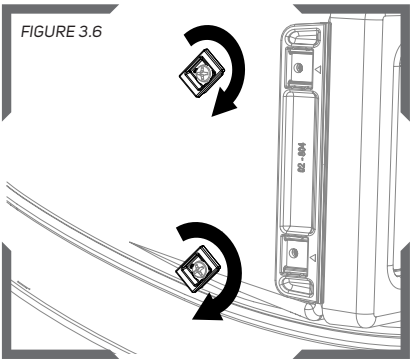

If you choose to use a 3mm outer lens instead of the standard 0.4mm outer lens (02-811) and tear-offs (02-816), unscrew the visor from the helmet. Remove the two spacers and rotate them so that the "3" is upright to indicate 3mm lens.

FIGURE 3.7

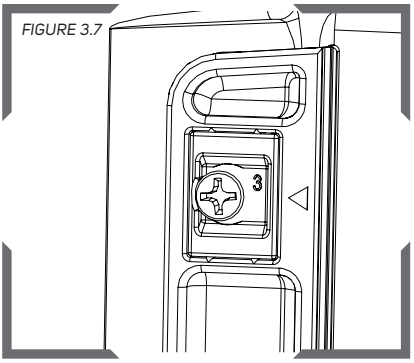

Secure the visor in place with the "3" next to the arrow on the visor by reinserting the screws. Make sure the screws go into the nuts of the support bracket on the inside of the helmet.

RESPIRATOR SETUP AND CARE CONTINUED

SETTING UP

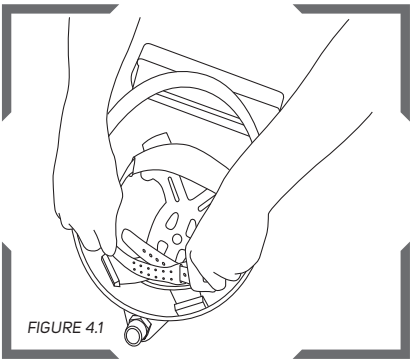

FIGURE 4.1

Head Harness
To adjust the head harness first unclip the locating pegs, then slide the band in or out to the desired size. Note: slide inwards to reduce the size. Once the desired size is obtained, clip the locating pegs back together.

Putting the Helmet in Place
Hold the helmet in front of you, holding the inner bib collar open. Lift the helmet and place it on your head making sure the head harness fits securely.

CONNECT THE AIR SUPPLY

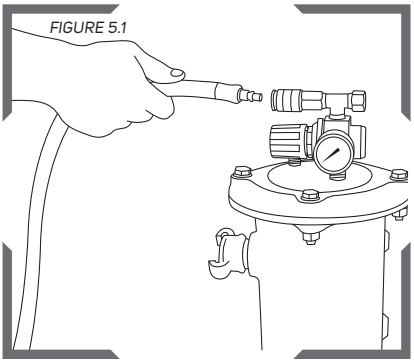

FIGURE 5.1

Connect the Breathing Air Line to a breathing air source supplying EN 12021 (AS/NZS 1715) or better quality air. Connect the Breathing Air Line quick disconnect fitting to the coupler on top of the Radex.

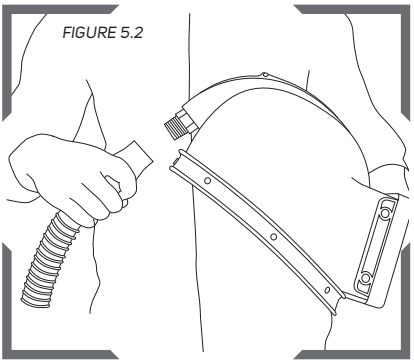

FIGURE 5.2

When attaching the breathing tube to the helmet, attach the fixed end of the breathing tube hose to the helmet fitting and the loose running nut to the flow control valve. Attach the Breathing Air Line to the flow control device.

With air flowing through the respirator adjust the air pressure at the point of attachment to the recommended pressure as specified in the Breathing Air Pressure Table (page 13).

NOTE:
Check the hose connections for any air leaks and tighten if necessary - replace any worn parts.

DONNING AND DOFFING

⚠ WARNING **Always check the interior of the respirator for contaminants before donning. Always don and doff the helmet while outside the work area, keeping the interior of the helmet clean and free of contaminants. Not doing these steps could expose you to hazardous materials and contaminants that could impair the function of the respirator.**

DONNING YOUR HELMET

Once you have completed the set up, you are ready to fit your GVS-RPB ASTRO. Firstly check inside the helmet to ensure that it is free of dust, dirt or contaminants. Then open the bottom of the cape, with the air flowing from the air source, put the respirator onto your head. Pull the cape down and tighten the draw cord around your neck to complete the seal. Make sure the visor is securely latched.

FIGURE 6.1

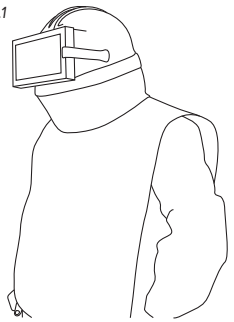

Once the helmet is fitting comfortably on your head, straighten the cape down at the front and back.

FIGURE 6.2

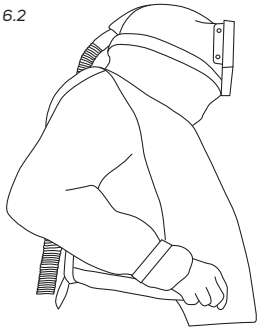

Place the Flow Control Device to your desired side at your hip.

DONNING AND DOFFING CONTINUED

FIGURE 6.3

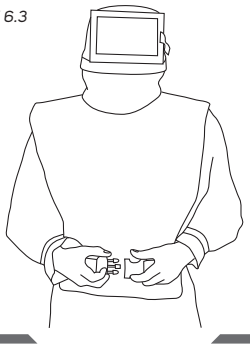

Now bring both buckles together at the front and push them until you hear a click. Pull the tab to tension the belt.

FIGURE 6.4

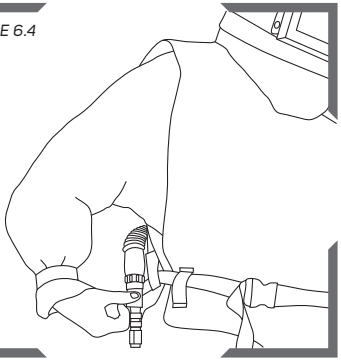

Now the helmet is fully fitted and the belt tightened. Again check the air pressure at the source to make sure it is still in accordance with Table 1.1 on page 13.

DOFFING YOUR HELMET

When you have finished working leave the work area wearing the respirator with air still flowing into the helmet. Depending on the contaminants, it may be advisable to clean the exterior of the helmet and your work garments before removing the respirator. A workplace cleaning program may be necessary.

STORAGE

After use, clean the respirator according to your company's cleaning program or the directions in this manual. Then let it dry, and store the respirator by hanging it up in a clean, dry place, away from the work area. Do not tuck the cape into the helmet if it has not been thoroughly cleaned. Before storing the respirator for an extended period of time, clean the unit following the cleaning instructions in this instruction manual. It is recommended to store or transport the respirator in a container or storage bag. Store in a cool dry place between -10°C to +45°C (14°F to 113°F) <90%rh.

After use:

FIGURE 6.5

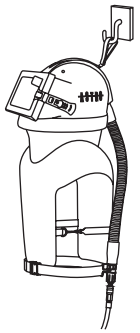

Long term storage or transport:

FIGURE 6.6

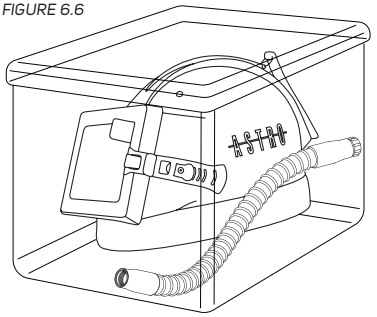

INSPECTION, CLEANING AND DISINFECTING

The GVS-RPB ASTRO Supplied Air Respirator has a limited service life, therefore a regular inspection, cleaning and replacement program must be conducted. Certain parts such as lenses must be replaced frequently.

All components of the respirator assembly should be inspected for damage or wear and tear before use. Replace worn or damaged parts immediately. USE ONLY GVS-RPB ASTRO parts. Refer to the parts list for the correct part numbers.

Clean and disinfect the helmet and head harness with mild detergent and a soft cloth or a disinfectant wipe. Do not clean respirator with volatile chemicals. The brow and top pad can be cleaned and disinfected in warm water with mild detergent. Thoroughly rinse the pads out and let air dry.

NOTE:

The leather cape must be cleaned with an appropriate leather cleaner.

BREATHING TUBE ASSEMBLY

Inspect the Breathing Tube NV2021B for splits or excessive wear. Check that the fittings are secured into the tube and are not allowing any air to escape. Replace the tube as soon as signs of damage or excessive wear become evident. Do not remove the foam that is inside the Breathing Tube as it reduces the noise level of the incoming air. The outside Breathing Tube can be cleaned and disinfected with warm water and a mild detergent, rinsed and air dried. Do not run water through the Breathing Tube.

BREATHING AIR LINE

The air supply hose should be inspected for cuts, cracks, blisters and signs of abrasion. Make sure the fittings are firmly crimped to the hose and air cannot escape. Make sure the hose has not been crushed or kinked. Replace the hose immediately if there are any signs of damage.

INSPECTION, CLEANING AND DISINFECTING CONTINUED

Do not run water through the inside of the hose. Clean the Quick Disconnect Couplings with an air blow down gun to remove any media or dirt that may jam the coupler.

LENSES AND LENS GASKETS

Check Inner Lens Gasket Seal for splits, cracks or wear and tear. Replace any damaged or worn parts immediately with GVS-RPB genuine parts. The Inner Lens Gasket Seal can be cleaned and disinfected with warm water and mild detergent, rinsed and air dried.

REMOVING THE CAPE

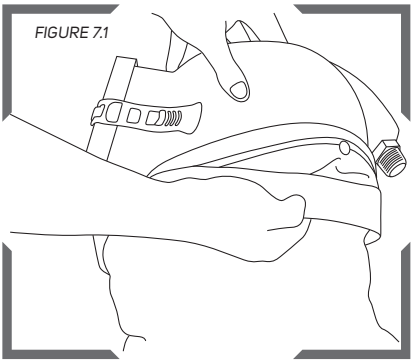

First remove the cape cover band to reveal the eight snaps. The cape can then easily be removed by undoing the snaps.

INSPECTING THE HELMET

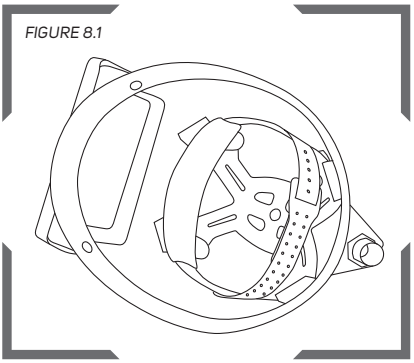

Having removed the cape, wipe out the inside of the helmet with a soft cloth and mild detergent or a disinfectant wipe. Check the inside for cracks in the shell, damage to the air inlet and head harness.

INNER LENS AND GASKET

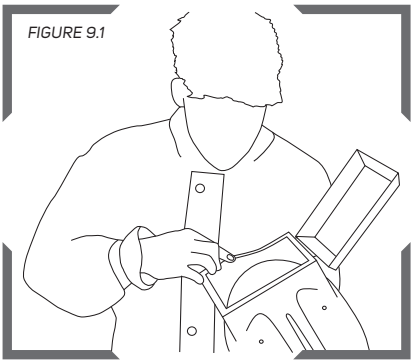

Make sure the inner lens gasket seal is securely fitted in the helmet with no cracks or tears in the seal. Check that the inner lens is correctly fitted into the gasket.

When necessary replace lenses as in Figures 3.1 and 3.2.

PARTS AND ACCESSORIES

VISOR AND LENSES *FIGURE 10.1*

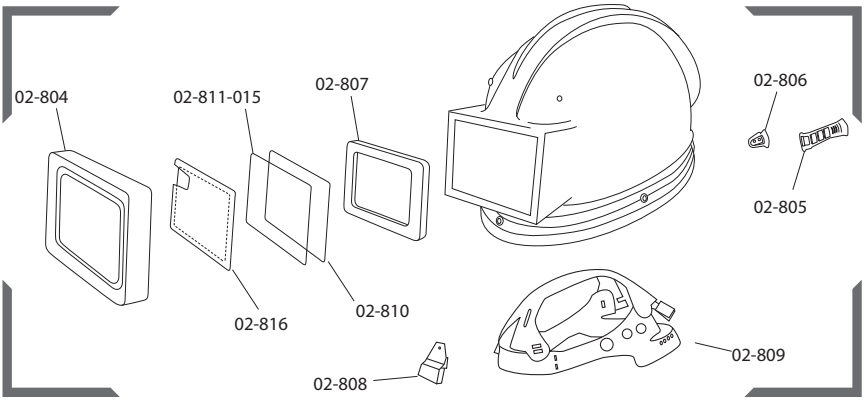

Part No.	Description
02-804	Visor
02-805	Visor Strap
02-806	Cleat
02-807	Gasket Seal
02-808	Suspension Clip (pkt 4)

Part No.	Description
02-809	Head Suspension
02-810	Inner Lens (pkt 10)
02-811-015	Outer Lens (pkt 50)
02-816	Tear-off Lens

RESPIRATOR CAPES *FIGURE 10.2*

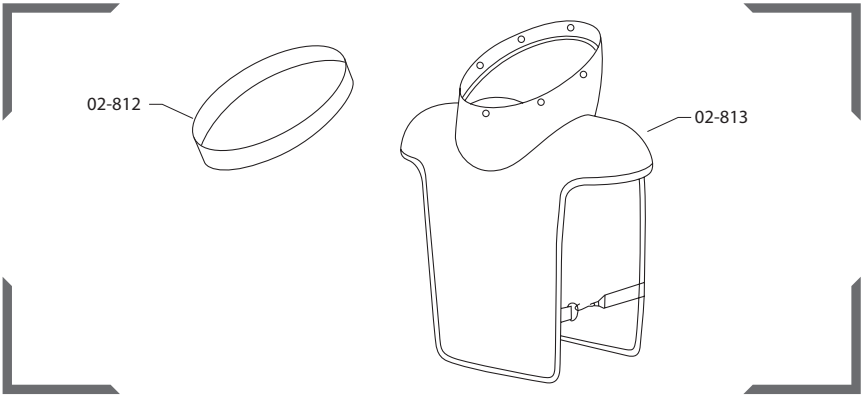

Part No.	Description
02-812	Cape Cover Band
02-813	Nylon Cape

PARTS AND ACCESSORIES CONTINUED

BREATHING TUBE & FLOW CONTROL DEVICES *FIGURE 10.3*

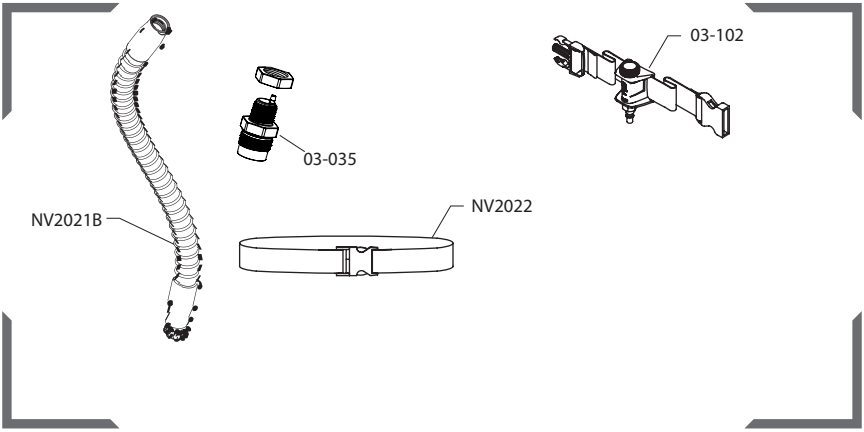

Part No.	Description
NV2021B	Breathing Tube
03-035	Breathing Tube Adaptor (to upgrade the ASTRO from the NV2021 to the NV2021B)
NV2022	Belt
03-102	Constant Flow Valve

⚠ WARNING **Use only exact, authentic GVS-RPB replacement parts (marked with the GVS-RPB logo and part number), and only in the specified configuration. Using incomplete or inappropriate equipment, including the use of counterfeit or non-GVS-RPB parts, can result in inadequate protection and will void the approval of the entire respirator assembly.**

AIR SUPPLY HOSES *Figure 10.4*

Series	1. Couplers	2. Plugs	3. Supplied-Air Hose Assemblies
RPB Quick Connect	03-022-CF 		04-322-25 RPB 7.5m 04-322-50 RPB 15m 04-322-100 RPB 30m

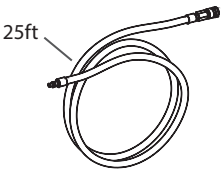

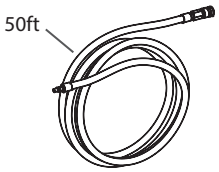

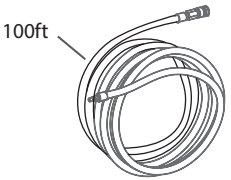

As detailed in column 3 of Figure 10.4

Protecting you for life's best moments.

LIMITED WARRANTY

RPB® warrants that its Products will be free from defects in materials and workmanship for one (1) year, subject to the terms of this limited warranty. The Products are sold only for commercial use, and no consumer warranties apply to the Products. This limited warranty is for the benefit of the original Product purchaser, and cannot be transferred or assigned. This is the sole and exclusive warranty provided by RPB®, and ALL CONDITIONS AND IMPLIED WARRANTIES (INCLUDING ANY WARRANTY OF MERCHANTABILITY OR FITNESS FOR A PARTICULAR PURPOSE) ARE EXCLUDED AND DISCLAIMED FROM WARRANTY COVERAGE. RPB's® limited warranty coverage does not apply to damage resulting from accident, improper use or misuse of the Products, wear and tear resulting from the normal use of the Products, or the failure to properly maintain the Products.

RPB's® limited warranty coverage runs from the original date of purchase of the Products, and applies only to warranted defects which first manifest themselves and are reported to RPB® within the warranty period. RPB® retains the right to determine to its reasonable satisfaction whether any claimed defect is covered by this limited warranty.

If a warranted defect occurs, RPB® will repair or replace the defective Product (or a component of the Product), in its sole discretion. This "repair or replacement" remedy is the sole and exclusive remedy under this limited warranty, and under no circumstances shall RPB's® liability under this limited warranty exceed the original purchase price for the Products (or the applicable component). RPB® has no responsibility for incidental or consequential damages, including loss of use, maintenance and other costs, and ALL INCIDENTAL AND CONSEQUENTIAL DAMAGES ARE EXCLUDED AND DISCLAIMED from this limited warranty. Contact RPB® to obtain warranty service. Proof of purchase must be provided to obtain warranty service. All costs of returning the Products to RPB® for warranty service must be paid by the purchaser.

RPB® reserves the right to improve its Products through changes in design or materials without being obligated to purchasers of previously manufactured Products.

LIABILITY

RPB® Safety cannot accept any liability of whatsoever nature arising directly or indirectly from the use or misuse of RPB® Safety products, including purposes that the products are not designed for. RPB® Safety is not liable for damage, loss or expense resulting from the failure to give advice or information or the giving of incorrect advice or information, whether or not due to RPB® Safety's negligence or that of its employees, agents or subcontractors.

NOTES

Protecting you for life's best moments.

NOTES

NOTES

OTHER PRODUCTS

ISO9001 CERTIFIED COMPANY

RPB® C40™ CLIMATE CONTROL

Looking for an advanced climate control device that can heat and cool your supplied air just by the slide of a lever? Look no further than the RPB® C40™. From the searing heat of an Arizona summer to a severe Scandinavian winter the RPB® C40™ will keep you comfortable.



AIRLINE FILTRATION

The RPB® RADEX® AIRLINE FILTER offers increased capacity, versatility and filtration. This optional equipment combines the versatility of either floor or wall mounting with increased filtration capacity, enabling customization to meet worker's needs and working environments.



AIR QUALITY MONITORING

Do you need an intelligent gas monitor that can give you complete confidence in the air you and your employees are breathing? The RPB® GX4® Gas Monitor has the ability to detect up to 4 gases simultaneously, giving you total peace of mind.



MAN-03

gvs-rpb.com | 1-866-494-4599

GVS | rpb

Protecting you for life's best moments.