Instruction Manual
Quiet-Link™ Ear Defenders

Employers: Read this manual and carry out the employer responsibilities (page 6).

Product users: Read this manual and follow the product user safety instructions (page 7).

Manuals are regularly updated. Make sure this manual is available to all users for reference.

Current version of manual and other languages: gvs-rpb.com/resources



EN English P.2

NIOSH APPROVED

ANSI S3.19-1974 HEARING PROTECTION

CE 2797
UKCA 0086
EN352-3:2020 HEARING PROTECTION

PRODUCT CERTIFICATION
BSI Certified Product
AS/NZS 1270:2002
BMP# 714303
HEARING PROTECTION

QUIET-LINK™

CONTENTS

- EXPLANATION OF SIGNAL WORDS AND SYMBOLS 2
- INTRODUCTION 3
- IMPORTANT SAFETY INFORMATION
  - PROTECTION PROVIDED AND LIMITATIONS 4
  - ATTENUATION DATA 4
  - EMPLOYER RESPONSIBILITIES 6
  - PRODUCT USER SAFETY INSTRUCTIONS 7
- SETUP AND CARE 9
- PARTS AND ACCESSORIES 10
- WARRANTY AND LIABILITY STATEMENT 11

EXPLANATION OF SIGNAL WORDS AND SYMBOLS

The following signal word and safety symbols are used in this manual and product labeling:

⚠ WARNING **WARNING** indicates a hazardous situation that, if not avoided, could result in death or serious injury.



Read the Instruction Manual.
Additional copies of GVS® manuals can be found at gvs-rpb.com.

CERTIFIED BY:

CE: BSI Group The Netherlands B.V. (NB2797), Say Building, John M. Keynesplein 9, 1066 EP, Amsterdam, NL

UKCA: BSI Group (AB0086), Kitemark Court, Knowhill, Milton Keynes MK5 8PP, United Kingdom

Benchmark: BSI Group Australia, Suite 1, Level 1, 54 Waterloo Road, Macquarie Park NSW 2113

GVS® Safety LLC is an ISO9001 certified company.

GVS SAFETY
Caton Road, Lancaster, Lancashire, UK, LA1 3PE
T: +44 (0)1524 847600 E: gvsuk@gvs.com W: www.gvs.com

GVS SAFETY - USA HEADQUARTERS
2807 Samoset Rd, Royal Oak, MI 48073, USA
T: 1-866-494-4599 F: 1-866-494-4509 E: respirators@gvs.com W: www.gvs-rpb.com

Copyright ©2026 GVS Safety, LLC. All rights reserved. All materials contained on this website are protected by United States copyright law and may not be reproduced, distributed, transmitted, displayed, published or broadcast without the prior written permission of GVS Safety, LLC. You may not alter or remove any trademark, copyright or other notice from copies of the content.

All trademarks, service marks, and logos used in this publication, both registered and unregistered, are the trademarks, service marks, or logos of their respective owners. All rights in the GVS Intellectual Property contained in this publication, including copyright, trademarks, service marks, trade secret, and patent rights are reserved. GVS Intellectual Property means any patent, patented articles, patent applications, designs, industrial designs, copyrights, software, source code, database rights, moral rights, inventions, techniques, technical data, trade secrets, know-how, brands, trademarks, trade names, slogans, logos, and any other common law and proprietary rights, whether registered or unregistered anywhere in the world, that are owned by, developed in whole or in part by, or licensed by GVS Safety, LLC.

For technical assistance contact our Customer Service Department at 1-866-494-4599 or email: respirators@gvs.com

Form #: 7.20.549
Rev: 8

INTRODUCTION

The GVS Quiet-Link Ear Defenders helmet mounted earmuffs (18-533) are part of the GVS LINK System. These earmuffs should only be fitted to and used only with the following respirators:

- Z-LINK®
- T-LINK®

These earmuffs meet the following standards:

- ANSI S3.19-1974
- CE EN 352-3:2020
- AS/NZS 1270:2002

MATERIALS

Helmet mounted earmuff supporting arms: Nickel plated spring steel
Ear cushions: PVC
Weight of the earmuff pair: 226g

See PROTECTION PROVIDED AND LIMITATIONS for details.

QUIET-LINK™

IMPORTANT SAFETY INFORMATION

⚠ WARNING Improper selection, fit, use, or maintenance of this product can result in temporary or permanent hearing loss. This product is intended for occupational use in accordance with applicable standards or regulations for your location, industry, and activity (see Employer Responsibilities, page 6). Familiarity with standards and regulations related to the use of this protective equipment is recommended, even if they do not directly apply to you. If self-employed or if used in a non-occupational setting, refer to Employer Responsibilities and Product User Safety Instructions. Go to gvs-rpb.com/important-safety-information for helpful links to OSHA and other content.

Employers: Read this manual and carry out the Employer Responsibilities (page 6).

Product users: Read this manual and follow the Product User Safety Instructions (page 7).

Check website for updates. Product manuals are regularly updated.

Visit gvs-rpb.com/resources for the most recent version of this manual before using the product.

PROTECTIONS PROVIDED AND LIMITATIONS

HEARING PROTECTION

- The Quiet-Link Ear Defender system provides an Noise Reduction Rating (NRR) of 25.
- The Quiet-Link Ear Defender helmet mounted system is not designed to be used with any other respirator or helmet besides the Z-Link and T-Link.

ATTENUATION DATA *Table 1.1*

TEST FREQUENCIES (Hz)	125	250	500	1000	2000	3150	4000	6300	8000	NRR
MEAN ATTENUATION (dB)	19.7	21.0	27.5	38.4	38.3	45.2	44.5	48.6	47.6	25
STANDARD DEVIATION (dB)	2.5	2.8	2.8	3.5	2.9	3.9	3.0	3.3	2.7	
MEANS MINUS STANDARD DEVIATION (DB)	17.2	18.2	24.7	34.8	35.4	41.3	41.5	45.3	44.9	

The level of noise entering a person's ear, when a hearing protector is worn as directed, is closely approximated by the difference between the A-weighted environmental noise level and the NRR.

Example:

1. The environmental noise level as measured at the ear is 92 dBA.
2. The NRR is 25 decibels (dB)
3. The level of noise entering the ear is approximately equal to 67dBA.

For noise environments dominated by frequencies below 500Hz, the C-weighted environmental noise level should be used in determining required NRR. Refer to Table 1.1. for attenuation data by frequency. Improper fit of this device will reduce its effectiveness in attenuating noise. Although hearing protectors can be recommended for protection against harmful effects of impulse noise,

the Noise Reduction Rating (NRR) is based on the attenuation of continuous noise and may not be an accurate indicator of the protection attainable against impulse noise, such as gunfire.

Note: The Noise Reduction Rating is derived from testing procedures at an independent laboratory and in accordance to acceptable A.N.S.I. standards. Actual noise reduction can vary from laboratory results as shown in Table 1.1 and as labelled on the packaging. Protection is maximized when: proper protector is selected for application, a good training program is utilized and proper fitting techniques are followed.

These earmuffs were tested in combination with the following industrial safety helmets/ respirators, and may give different levels of protection if fitted to different helmets/respirators: Z-Link and T-Link

SNR ATTENUATION DATA *Table 1.2*

TEST FREQUENCIES (Hz)	125	250	500	1000	2000	4000	8000	SNR
MEAN ATTENUATION (dB)	21.1	21.3	29.1	39.3	37.9	42.3	42.3	33
STANDARD DEVIATION (dB)	2.9	1.8	2.6	2.8	2.5	3.4	2.2	
ASSUMED PROTECTION VALUE (APV) (dB)	18.2	19.5	26.5	36.5	35.4	38.9	40.0	

■ SNR 33 dB, ■ H - 37 dB, ■ M - 30 dB, ■ L - 23 dB, ■ CLASS 4, ■ SLC 23.8 dB
■ Headband force 15.1 N

HAZARD LIMITATIONS

The GVS Quiet-Link is **NOT FOR USE** if:

■ They cause the respirator to not properly fit on the users head or they cause the cape, face seal, or hood to not seal and potentially allow contaminants into the respirator.

PPE REGULATION

■ The Quiet-Link Ear Defenders conform to the PPE Regulation (EU) 2016/425. Regulation 2016/425 on PPE as brought into UK Law and amended.
■ The Declaration of Conformity can be found at gvs-rpb.com/resources
■ See the Storage section for information on packaging and protection required for transportation.

GVS QUIET-LINK™

EMPLOYER RESPONSIBILITIES

Your specific responsibilities may vary by location and industry, but in general GVS expects that employers will:

- **Follow all applicable standards and regulations for your location, industry, and activity.**
  Depending on your location and industry, a number of standards and regulations may apply to your selection and use of personal protective equipment. These may include such things as federal (e.g., OSHA, MSHA, Canadian Occupational Health and Safety), local (e.g., state, provincial), or military standards and regulations and consensus standards such as ANSI and CSA. Know which requirements apply to your location and industry.

- **Have appropriate safety programs in place.**
  Have and follow:
  - ☐ A workplace safety program.

- **In accordance with the above,**
  - ☐ Perform a hazard analysis and select appropriate equipment for each activity. A hazard analysis should be performed by a qualified person. Controls should be in place as appropriate and a qualified person should determine what kind of hearing protection is appropriate for the intended activities and environments of use.

    As applicable, check your workplace safety program and standards and regulations for your activity or industry for related protection requirements, and see this manual (Protection Provided and Limitations, page 4).

  - ☐ Train employees in the Quiet-Link's use, maintenance, and limitations.
    Appoint a qualified individual who is knowledgable about the GVS Quiet-Link to provide training:

    Train each Quiet-Link user in the product's use, application, inspection, maintenance, storage, fitting, and limitations in accordance with the content of this Instruction Manual and standard or regulatory requirements. Ensure that each intended user reads the manual.

  - ☐ Ensure that equipment is properly set up, used, and maintained. Make sure that equipment is properly set up, inspected, fitted, used, and maintained.

  - ☐ If you have any questions, contact GVS.
    - Call Customer Service Department at:
      Tel: 1-866-494-4599
      Email: respirators@gvs.com
      Web: gvs-rpb.com

PRODUCT USER SAFETY INSTRUCTIONS

BEFORE INITIAL USE - BE TRAINED

Do not use this product until you have read this manual (additional copies available at gvs-rpb.com) and been trained in the use, maintenance, and limitations by a qualified individual (appointed by your employer) who is knowledgable about the GVS Quiet-Link Ear Defenders.

Allergens: No known common allergens are used in this product.

Some materials could cause an allergic reaction in susceptible individuals. If you have a known allergy or develop irritation, inform your employer. Irritation may occur from lack of cleaning. Following all cleaning and care instructions provided in the instruction manuals for this and any other GVS products you are using.

ENSURE PROPER FIT

The earmuff must fit snugly without any gaps in order to provide the specified level of noise reduction. Check the size and fit before use and be aware of how accessories might interfere with proper fit as discussed below:

When wearing **eyeglasses, goggles, or respirator straps** between the sealing surface of the earmuffs, noise reduction may be lower. Wear glasses or goggles with thin, flat temples or straps to reduce the interference with the seal of the earmuff cushions. Make sure long hair is pulled back as much as possible and remove all items that may interfere with the earmuffs seal around the ears such as jewelry, pencils/pens, earbuds or hats. Do not bend or reshape the supporting arm wires as this will reduce the seal of the earmuffs and reduce the noise reduction.

These helmet mounted earmuffs are **medium size** range. Earmuffs complying with EN 352-3 are of "medium size range", "small size range" or "large size range". "Medium size range" helmet mounted earmuffs will fit the majority of wearers. "Small size range" or "large size range" helmet mounted earmuffs are designed to fit wearers for whom "medium size range" earmuffs are not suitable. The GVS Quiet-Link Ear Defenders are only available in medium size. Consult your employer if you feel these earmuffs do not fit properly.

The fitting of **hygiene covers** to the cushions may affect the acoustic performance of the earmuffs. Be aware that the hearing protection provided may be reduced.

MAKE SURE THE SYSTEM IS READY FOR USE

Make sure you have a complete system. Verify that you have all required components for the Quiet-Link to provide appropriate hearing protection.

See the instructions in this manual for installation and maintenance instructions. Use only authentic GVS brand parts and components. Using incomplete or inappropriate equipment, including the use of counterfeit or non-GVS parts, can result in inadequate protection. Do not modify or alter any part of this product.

Inspect all components daily for signs of damage or wear and tear that may reduce the level of protection originally provided. Remove any damaged component or product, including any Quiet-Link Ear Defenders or respirator that has been subject to impact, from service until repaired or replaced. Damaged components should be replaced with genuine GVS-RPB brand replacement

PRODUCT USER SAFETY INSTRUCTIONS CONTINUED

parts. Keep the inside of the Ear Defenders and respirator clean at all times.

- Quiet-Link has a shelf life of 5 years from the date of manufacture.
- Quiet-Link has an in service life of 3 years from when first put into use.

Make sure that the respirator with Quiet-Link Ear Defenders is correctly assembled. Verify that you have the appropriate equipment for your activity. As applicable, check your workplace safety program, standards and regulations for your activity or industry. (See PROTECTION PROVIDED AND LIMITATIONS, page 4.)

BEFORE DONNING THE A RESPIRATOR FITTED WITH THE QUIET-LINK EAR DEFENDERS:

Verify the Quiet-Link provides sufficient hearing protection for the noise levels in you work area:

- Determine the noise levels in the work area and verify that with the use of Quiet-Link that the noise levels will not exceed those allowed by applicable OSHA, EPA, NIOSH or local regulations and recommendations.

If you have any questions, ask your employer.

QUIET-LINK HELMET MOUNTED EARMUFFS MUST BE:

- worn at all times in noisy surroundings.
- fitted, adjusted and maintained in accordance with these instructions.
- regularly inspected for serviceability.

⚠ WARNING **If these recommendations are not adhered to, the protection afforded by the helmet mounted earmuffs will be severely impaired.**

DO NOT ENTER THE WORK AREA if any of the following conditions exist:

- Any product component becomes damaged.
- The Quiet-Link pads are not sealed completely around your ears.
- You have any other reason to suspect that the Quiet-Link is not providing adequate protection.

PRODUCT CARE

Quiet-Link helmet mounted earmuffs must be fitted, adjusted and maintained in accordance with these instructions. Never place the Quiet-Link Ear Defenders on hot surfaces. Do not apply paints, solvents, adhesives or self-adhesive labels except as instructed by GVS. This product may be adversely affected by certain chemicals. Clean with a mild detergent and a soft cloth or a disinfectant wipe. Cleaning agents used must not be harmful to the wearer. Allow foam to air dry completely before use. After use, clean the earmuffs before storing them.

STORAGE

Do not store in a place that is above 55°C or 131°F or in direct sunlight, such as a car dashboard. Earmuffs, and in particular cushions, may deteriorate with use and should be examined at frequent intervals for cracking and leakage, for example. Replace the cushions as needed. Simply pull off the old cushions and apply the new ones by removing the adhesive backing paper and sticking them onto the earmuffs. If the Quiet-Link Ear Defenders are not going to be used for a longer period of time or for transportation, it is recommended to store in a container or a bag.

SETUP

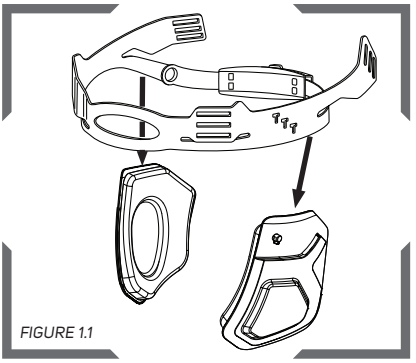

FIGURE 1.1

Remove the head-harness from the helmet, then remove the LINK System Side Pads from the head-harness. Reattach the ratchet assembly to the head-harness.

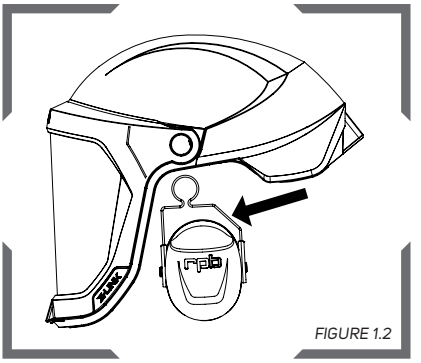

FIGURE 1.2

Make sure the angled side of the mounting wire is towards the back of the helmet.

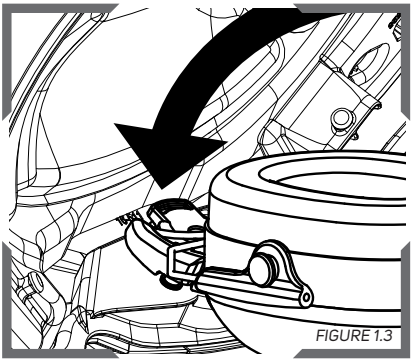

FIGURE 1.3

Hook the loop of the mounting wire over the tab on the top of the earmuff mounting clip.

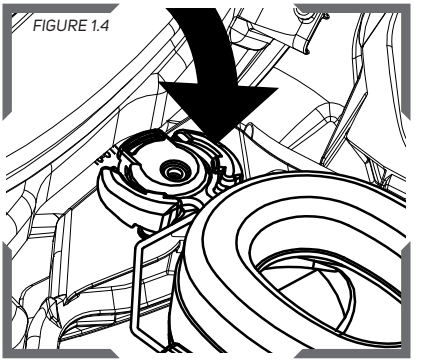

FIGURE 1.4

Squeeze the mounting wire and then push the wire into the earmuff mounting clip until it snaps into place.

Repeat these instructions for the other side. Once both earmuffs are attached, reattach the head-harness. Then put on the helmet and adjust the height of the earmuffs by sliding them up or down the mounting wire until your ear is in the middle of the cup. Be sure the earmuff pad is firmly sealing equally all of the way around the ear.

QUIET-LINK™

PARTS AND ACCESSORIES

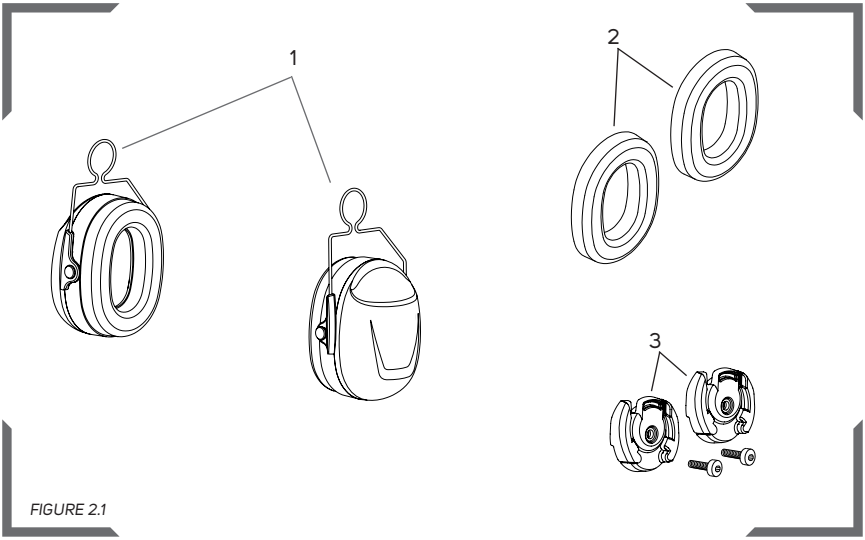

FIGURE 2.1

PARTS LIST

Item Number	Description	Part Number
1	Quiet-Link helmet mounted earmuff pair	18-533
2	Hygiene kit - replacement cushions and foam	18-538
3	Earmuff mounting bracket with screw, pair	16-518

⚠ WARNING **Use only exact, authentic GVS replacement parts (marked with the GVS logo and part number), and only in the specified configuration. Using incomplete or inappropriate equipment, including the use of counterfeit or non-GVS parts, can result in inadequate protection and will void the NIOSH approval of the earmuff assembly.**

LIMITED WARRANTY

GVS® warrants that its Products will be free from defects in materials and workmanship for one (1) year, subject to the terms of this limited warranty. The Products are sold only for commercial use, and no consumer warranties apply to the Products. This limited warranty is for the benefit of the original Product purchaser, and cannot be transferred or assigned. This is the sole and exclusive warranty provided by GVS®, and ALL CONDITIONS AND IMPLIED WARRANTIES (INCLUDING ANY WARRANTY OF MERCHANTABILITY OR FITNESS FOR A PARTICULAR PURPOSE) ARE EXCLUDED AND DISCLAIMED FROM WARRANTY COVERAGE. GVSs® limited warranty coverage does not apply to damage resulting from accident, improper use or misuse of the Products, wear and tear resulting from the normal use of the Products, or the failure to properly maintain the Products.

GVS's® limited warranty coverage runs from the original date of purchase of the Products, and applies only to warranted defects which first manifest themselves and are reported to GVS® within the warranty period. GVS® retains the right to determine to its reasonable satisfaction whether any claimed defect is covered by this limited warranty.

If a warranted defect occurs, GVS® will repair or replace the defective Product (or a component of the Product), in its sole discretion. This "repair or replacement" remedy is the sole and exclusive remedy under this limited warranty, and under no circumstances shall GVS's® liability under this limited warranty exceed the original purchase price for the Products (or the applicable component). GVS® has no responsibility for incidental or consequential damages, including loss of use, maintenance and other costs, and ALL INCIDENTAL AND CONSEQUENTIAL DAMAGES ARE EXCLUDED AND DISCLAIMED from this limited warranty. Contact GVS® to obtain warranty service. Proof of purchase must be provided to obtain warranty service. All costs of returning the Products to GVS® for warranty service must be paid by the purchaser.

GVS® reserves the right to improve its Products through changes in design or materials without being obligated to purchasers of previously manufactured Products.

LIABILITY

GVS® Safety cannot accept any liability of whatsoever nature arising directly or indirectly from the use or misuse of GVS® Safety products, including purposes that the products are not designed for. GVS® Safety is not liable for damage, loss or expense resulting from the failure to give advice or information or the giving of incorrect advice or information, whether or not due to GVS® Safety's negligence or that of its employees, agents or subcontractors.

QUIET-LINK™

NOTES

NOTES

ISO9001
CERTIFIED COMPANY

OTHER PRODUCTS

GVS® VISION-LINK™

The GVS® Vision-Link™ is an intuitive and unobtrusive helmet lighting system for the Z-Link® and T-Link®. It easily attaches to the helmet, providing bright light wherever you look, Advancing your safety, and increasing your productivity.



SENA TUFFTALK M-02®

Providing in helmet noise protection and communications with mesh networking, hands-free communication, and cell phone connectivity. Designed to mount directly inside the helmet of the Z-LINK® and the T-LINK®.



GVS PX5 PAPR

The GVS PX5 is a compact and versatile PAPR that changes the way people experience clean filtered air across multiple industries – from medical and chemical settings, to the profoundly harsh environments of foundries. Boasting a sleek lightweight design, the PX5 contours to the users back, evenly distributing weight through its vertical mounting. With simple considered edges, curves and sealed housing unit, the PX5 is certified to meet IP65 in use for ease of decontamination.



MAN-20

gvs.com | gvs-rpb.com | 1-866-494-4599