Protecting you for life's best moments.

Instruction Manual
T200™ Respirator

Employers: Read this manual and the flow control device instruction manual and carry out the employer responsibilities (page 7).

Product users: Read this manual and the flow control device instruction manual and follow the product user safety instructions (page 9).

Manuals are regularly updated. Make sure this manual is available to all users for reference.

Current version of manual and other languages: gvs-rpb.com/resources



PRODUCT CERTIFICATION
BSI Certified Product
AS/NZS 1716:2012
BMP# 714303
RESPIRATORY PROTECTION

AS/NZS 1337.1:2010
BMP# 714304
EYE & FACE PROTECTION
Not all configurations conform to this standard. Please visit gvs-rpb.com for more details.

CE 2797
UKCA 0086

EN12941:2023 TH3
RESPIRATORY PROTECTION

EN352-1:2020
HEARING PROTECTION
Only in conjunction with 18-524 earmuffs.

EN166:2001 CLASS 1F3
EYE & FACE PROTECTION
Not all configurations conform to this standard. Please visit gvs-rpb.com for more details.

EN English P.2

GVS | rpb T200™

Protecting you for life's best moments.

CONTENTS

- EXPLANATION OF SIGNAL WORDS AND SYMBOLS 2
- INTRODUCTION 4
- IMPORTANT SAFETY INFORMATION
  - PROTECTION PROVIDED AND LIMITATIONS 4
  - RESPIRATORY COMPONENT DIAGRAM - CAUTIONS & LIMITATIONS 7
  - AIR SOURCE, FITTINGS, AND PRESSURE 8
  - EMPLOYER RESPONSIBILITIES 8
  - PRODUCT USER SAFETY INSTRUCTIONS 10
- RESPIRATOR SETUP AND CARE 13
- DONNING AND DOFFING 20
- STORAGE 22
- PARTS AND ACCESSORIES 23
- WARRANTY AND LIABILITY STATEMENT 26

EXPLANATION OF SIGNAL WORDS AND SYMBOLS

The following signal word and safety symbols are used in this manual and product labeling:

⚠ WARNING **WARNING** indicates a hazardous situation that, if not avoided, could result in death or serious injury.

⚠ DANGER **DANGER** Indicates a hazardous situation that, if not avoided, will result in death or serious injury.



Read the Instruction Manual.
Additional copies of GVS-RPB® manuals can be found at gvs-rpb.com.

CERTIFIED BY:

CE: BSI Group The Netherlands B.V. (NB2797), Say Building, John M. Keynesplein 9, 1066 EP, Amsterdam, NL

UKCA: BSI Group (AB0086), Kitemark Court, Knowhill, Milton Keynes MK5 8PP, United Kingdom

PPE REGULATION

- The T200 conforms to the PPE Regulation (EU) 2016/425. Regulation 2016/425 on PPE as brought into UK Law and amended.
- The Declaration of Conformity can be found at gvs-rpb.com/resources
- See the Storage section for information on packaging and protection required for transportation.

GVS-RPB Safety LLC is an ISO9001 certified company.

GVS-RPB® Safety - Global Headquarters
2807 Samoset Rd, Royal Oak, MI 48073, USA
T: 1-866-494-4599 F: 1-866-494-4509 E: sales@gvs.com

GVS S.p.A.
Via Roma 50, 40069 Zona Industriale BO, Italy
T: +39 0516176391 E: sales@gvs.com

GVS Filter Technology UK Ltd.
Caton Road, Lancaster, Lancashire, UK, LA1 3PE
T: +44 (0)1524 847600 E: sales@gvs.com

gvs-rpb.com

Copyright ©2025 GVS-RPB SAFETY, LLC. All rights reserved. All materials contained on this website are protected by United States copyright law and may not be reproduced, distributed, transmitted, displayed, published or broadcast without the prior written permission of GVS-RPB SAFETY, LLC. You may not alter or remove any trademark, copyright or other notice from copies of the content.

All trademarks, service marks, and logos used in this publication, both registered and unregistered, are the trademarks, service marks, or logos of their respective owners. All rights in the RPB Intellectual Property contained in this publication, including copyright, trademarks, service marks, trade secret, and patent rights are reserved. RPB Intellectual Property means any patent, patented articles, patent applications, designs, industrial designs, copyrights, software, source code, database rights, moral rights, inventions, techniques, technical data, trade secrets, know-how, brands, trademarks, trade names, slogans, logos, and any other common law and proprietary rights, whether registered or unregistered anywhere in the world, that are owned by, developed in whole or in part by, or licensed by GVS-RPB SAFETY, LLC.

For technical assistance contact our Customer Service Department at 1-866-494-4599 or email: sales@gvs.com

Form #: 7.20.506
Rev: 3

GVS | rpb T200™

Protecting you for life's best moments.

INTRODUCTION

The T200™ is a multiuse respirator designed for a range of different applications where there is a need to be protected from airborne contaminants. With an optional bump cap for head protection, and three hood options available, the T200 can used in both industrial and healthcare settings. For increased hearing protection, optional Quiet-Slim™ Ear Defender earmuff system can be installed.

This product must be inspected and maintained in accordance with this instruction manual at all times.

See PROTECTION PROVIDED AND LIMITATIONS (page 4) for details.

IMPORTANT SAFETY INFORMATION

⚠ WARNING Improper selection, fit, use, or maintenance of this product can result in transfer of illness, injury, life threatening delayed lung, skin or eye disease, or death. This product is intended for occupational use in accordance with applicable standards or regulations for your location, industry, and activity (see Employer Responsibilities, page 7). Familiarity with standards and regulations related to the use of this protective equipment is recommended, even if they do not directly apply to you. If self-employed or if used in a non-occupational setting, refer to Employer Responsibilities and Product User Safety Instructions. Go to gvs-rpb.com/important-safety-information for helpful links to CE standards and other content.

EMPLOYERS: Read this manual and the air supply device Instruction Manual and carry out the Employer Responsibilities (page 7).

PRODUCT USERS: Read this manual and the air supply device Instruction Manual and follow the Product User Safety Instructions (page 9).

CHECK WEBSITE FOR UPDATES. Product manuals are regularly updated.
Visit gvs-rpb.com/resources for the most recent version of this manual before using the product.

PROTECTION PROVIDED AND LIMITATIONS

RESPIRATION

The GVS-RPB T200 is approved in the categories as follows:

Powered Air
The GVS-RPB T200 Respirator, when properly fitted and used with all required components, including the Breathing Tube Assembly and the GVS-RPB® PX5® Powered Air Purifying Respirator, is approved to EN 12941:2023 TH3 as a powered air purifying respirator. The T200 significantly reduces, but does not completely eliminate, the breathing of contaminates by the respirator wearer. Specific protection depends on the filter selected for use in the GVS-RPB PX5 PAPR (see PX5 Instruction Manual).

Head-top Classifications *TABLE 1.1*

PAPR MODEL	RESPIRATOR HEAD-TOPS	EN 12941 CLASSIFI-CATION	NOMINAL PROTECTION FACTOR	BREATHING TUBES 04-831 04-841	HEPA FILTER	COMBI-NATION FILTERS
PX5	T200 Tychem 2000 - Face Seal Hood 17-722	TH3	500	✓	✓	✓
PX5	T200 Tychem 2000 - Shoulder Length Face Seal Hood 17-732	TH3	500	✓	✓	✓
PX5	T-Link Tychem 2000 - Neck Seal Hood 17-712	TH3	500	✓	✓	✓
PX5	T-Link Tychem 4000 - Neck Seal Hood 17-713	TH3	500	✓	✓	✓
PX5	T-Link Tychem 4000 - Extra Long Neck Seal Hood 17-713-SX	TH3	500	✓	✓	✓

The EN 12941 standard defines three classes of performance (TH1, TH2 and TH3). The numbers define the level of performance (inward leakage) and the pull strength of the breathing tubes and couplings within the classification. Inward leakage for classification TH1 is maximum 10%, for TH2 maximum 2% and for TH3 maximum 0.2%.

HAZARD LIMITATIONS

The GVS-RPB T200 Respirator is **NOT FOR USE** if**:**

- In atmospheres immediately dangerous to life or health (IDLH).
- Wearer cannot escape without the aid of the respirator.
- Atmosphere contains less than 21% ±1% oxygen.
- In abrasive blasting applications.
- For protection against hazardous gases (e.g., carbon monoxide).
- Contaminants are in excess of regulations or recommendations.
- Contaminants or contaminant concentrations are unknown.
- Work area is poorly ventilated.
- The temperature is outside the range of -10°C to +60°C (14°F to 140°F).
- A flammable or explosive atmosphere is present when used with systems including electrical parts that are not intrinsically safe, such as the PX5 PAPR.

FACE AND EYES

- The T200 with **Standard Lens does meet** EN 166:2001 1F3 (AS/NZS 1337.1:2010) face

PROTECTION PROVIDED AND LIMITATIONS CONTINUED

shield requirements.

- The T200 is not designed or tested to provide protection against molten metals or corrosive liquids.
- **Note:** Safety glasses may be required to be worn depending on the job hazard analysis. The T200 does not provide protection against the transfer of impact to both safety and prescription lens glasses worn underneath the hood. It does not provide complete eye and face protection against severe impact and penetration. It is not a suitable substitute for good safety practices and engineering controls.

HEAD

- The T200, when equipped with the bump cap provides minimal head protection and **does not** meet EN 812:2012 requirements. It **does not** meet the EN 397:2012+A1:2012 (AS/NZS 1801:1997) requirements.

HEARING

- The Quiet-Slim™ Ear Defender system provides a Noise Reduction Rating (NRR) of 21 and a SNR of 28 to meet EN 352-1 requirements. Refer to the Quiet-Slim instruction manual to ensure proper installation and fit .
- Hearing protection must be worn and properly fitted when exposed to noise levels that exceed the permissible exposure levels. It is require that additional hear protection is worn under this respirator, such as the 18-524 Quite Slim Ear Defenders or a pair of Foam or Silicon Earplug with an SNR 25 rating or higher.
- Hearing protection must be worn with the 03-822-DC back pack with the 03-841 short breathing tube configuration when used with the gas filters.

The T200 is a loose fitting respirator, caution is required when used in high winds.

RESPIRATOR COMPONENT DIAGRAM - PAPR

The GVS-RPB T200 Powered Air Purifying Respirator consists of 3 main components. All 3 components must be present and properly assembled to constitute a complete EN 12941 (AS/NZS 1716) as power air purifying respirator.

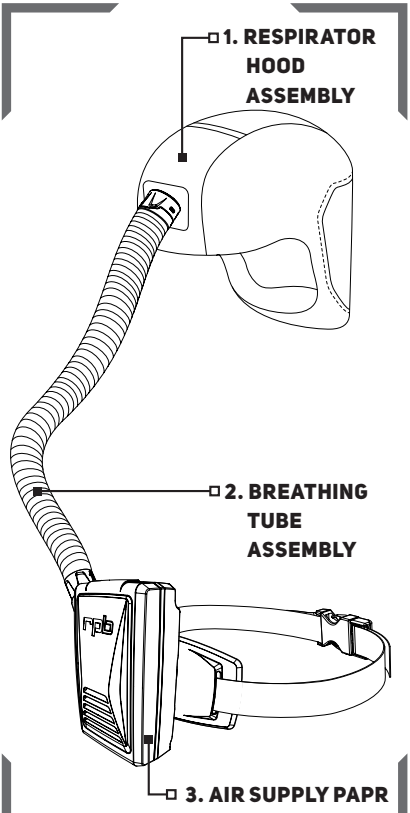

Figure 1.1

CAUTIONS AND LIMITATIONS

POWERED AIR

A. Not for use in atmospheres containing less than 21% ±1% oxygen.

B. Not for use in atmospheres immediately dangerous to life or health.

C. Do not exceed maximum use concentrations established by regulatory standards.

F. Do not use powered air-purifying respirators if airflow is less than 170 lpm (6 cfm) for hoods and/or helmets.

H. Follow established cartridge and canister change schedules or observe ESLI to ensure that cartridge and canisters are replaced before breakthrough occurs.

I. Contains electrical parts that may cause an ignition in flammable or explosive atmospheres.

J. Failure to properly use and maintain this product could result in injury or death.

L. Follow the manufacturer's User's Instructions for changing cartridges, canister and/or filters.

M. All approved respirators shall be selected, fitted, used and maintained in accordance with applicable regulations.

N. Never substitute, modify, add or omit parts. Use only exact replacement parts in the configuration as specified by the manufacturer.

O. Refer to user's instructions, and/or maintenance manuals for information on use and maintenance of these respirators.

P. This respirator is not evaluated as a surgical mask.

AIR SOURCE, FITTINGS, AND PRESSURE

AIR SOURCE

Powered Air

Check that the contaminated area is within the limits of use for a Powered Air Purifying Respirator and determine the type of contamination. Once the contamination level has been confirmed you can then determine the filter cartridge to be used for the application, to make sure that you are sufficiently protected. Make sure that the area is well ventilated and that regular air samples are taken to confirm the atmosphere stays within the levels recommended by the governing bodies. Follow the PX5 PAPR Instruction Manual for more details.

TABLE 1.2

AIR FLOW	MMDF: 170slpm (6cfm). Speed 1: Greater than 180slpm (6.4cfm). Speed 2: Greater than 205slpm (7.2cfm) Speed 3: Greater than 230slpm (8.1cfm)

EMPLOYER RESPONSIBILITIES

Your specific responsibilities may vary by location and industry, but in general GVS-RPB expects that employers will:

- **Follow all applicable standards and regulations for your location, industry, and activity.**
  Depending on your location and industry, a number of standards and regulations may apply to your selection and use of respirators and other personal protective equipment. These may include such things as national, local, or military standards and regulations and consensus standards such as CE and AS/NZS. There are also requirements specific to particular contaminants, e.g. silica (see gvs-rpb.com/important-safety-information for more information), asbestos, organic pathogens, etc. Know which requirements apply to your location and industry.
- **Have appropriate safety programs in place.**
  Have and follow:
  - ☐ A workplace safety program.
  - ☐ A written respiratory protection program in accordance with applicable standards and regulations.
- **In accordance with the above**,
  - ☐ **Perform a hazard analysis and select appropriate equipment for each activity.**
    A hazard analysis should be performed by a qualified person. Controls should be in place as appropriate and a qualified person should determine what kind of respiratory, face, eye, head, and hearing protection are appropriate for the intended environments. (For example, select a respirator appropriate to the specific airborne hazards, with

consideration of workplace and user factors and with an Assigned Protection Factor (APF) that meets or exceeds the required level for employee protection.)

Check your workplace safety program, respiratory protection program, and standards and regulations for your industry for related protection requirements. See this manual (Protection Provided and Limitations, page 4) and the PX5 PAPR Instruction Manual for product specifications.

☐ **Be sure employees are medically qualified to use a respirator.**
Have a qualified physician or other licensed health care professional (PLHCP) perform medical evaluations using a medical questionnaire or an initial medical examination.

☐ **Train employees in the T200's use, maintenance, and limitations.**
Appoint a qualified individual who is knowledgable about the GVS-RPB T200 to provide training:

Qualifications of the Respirator Trainer. Anyone providing respirator training shall:

a) be knowledgable in the application and use of the respirator(s);
b) have practical knowledge in the selection and use of respirator(s) and work practices at the site;
c) have an understanding of the site's respirator program; and
d) be knowledgable of applicable regulations.

Train each T200 user in the product's use, application, inspection, maintenance, storage, fitting, and limitations in accordance with the content of this Instruction Manual and the approved air supply device Instruction Manual and standard or regulatory requirements. Ensure that each intended user reads both these manuals. Contact GVS-RPB for training assistance.

☐ **Ensure that equipment is properly set up, used, and maintained.**
Make sure that equipment is properly set up, inspected, fitted, used, and maintained, including selection of the appropriate air filter cartridge for the application.

☐ **Measure and monitor airborne contaminants in the work area.**
Measure and monitor airborne contaminant levels in the work area in accordance with applicable requirements. Make sure work area is well ventilated.

☐ **If you have any questions, contact GVS-RPB.**

- Contact the Customer Service Department at:
  Tel: 1-866-494-4599
  Email: sales@gvs.com
  Web: gvs-rpb.com

GVS | rpb T200™

Protecting you for life's best moments.

PRODUCT USER SAFETY INSTRUCTIONS

BEFORE INITIAL USE - BE TRAINED AND MEDICALLY QUALIFIED

Do not use this respirator until you have read this manual and the PX5 PAPR Instruction Manual (additional copies available at gvs-rpb.com) and been trained in the respirator's use, maintenance, and limitations by a knowledgeable individual (appointed by your employer) who is knowledgable about the GVS-RPB T200 Respirator.

Do not wear this respirator until you have passed a medical evaluation using a medical questionnaire or an initial medical examination by a qualified physician or other licensed health care professional (PLHCP).

Allergens: No known common allergens are used in this product.

Some materials could cause an allergic reaction in susceptible individuals. If you have a known allergy or develop irritation, inform your employer. Follow all cleaning and care instructions provided in the instruction manuals for this and any other GVS-RPB products you are using.

MAKE SURE THE SYSTEM IS READY FOR USE

Make sure you have a complete system. Verify that you have all required components for the T200 to serve as a complete approved respirator:

- Respirator Hood Assembly (T200 or T-Link)
- Breathing Tube Assembly
- Flow Control Device (PX5 PAPR)

See Respirator Component Diagram (page 6). The GVS-RPB T200 is only approved to be used with the GVS-RPB PX5 PAPR. Use only authentic GVS-RPB brand parts and components that are part of the approved respirator assembly. Using incomplete or inappropriate equipment, including the use of counterfeit or non-GVS-RPB parts, can result in inadequate protection and will void the approval of the entire respirator. Do not modify or alter any part of this product.

Inspect all components daily for signs of damage or wear and tear that may reduce the level of protection originally provided. Remove any damaged component or product, including any hood or helmet that has been subject to impact, from service until repaired or replaced. Scratched or damaged lenses or other components should be replaced with genuine RPB brand replacement parts. When the hood is replaced, make sure to remove any additional protective film from both sides of the lens. If the film is left in place, it could affect the optical clarity of the lens and cause eye strain. Inspect the inside of the respirator for respirable dust or other foreign objects. Keep the inside of the respirator clean at all times.

- T200 has a shelf life of 5 years from the date of manufacture.
- T200 has an in service life of 3 years from when first put into use

Make sure that the helmet is correctly assembled in the configuration that suits your application. An incomplete or improperly installed hood could provide inadequate impact and respiratory protection. *See Respirator Setup and Care (page 12) See Donning (page 19) for fit information.*

VERIFY THAT YOU HAVE THE APPROPRIATE EQUIPMENT FOR YOUR ACTIVITY

Verify that the T200 provides appropriate protection for your activity. As applicable, check your workplace safety program, respiratory protection program, standards, and regulations for your activity or industry. (See PROTECTION PROVIDED AND LIMITATIONS, page 4.)

BEFORE DONNING THE T200:

Verify airborne contaminants are within recommended limits for respirator use:

- Determine the type and level of contamination. Verify that airborne contaminant concentrations do not exceed those allowed by applicable regulations and recommendations for powered air purifying respirators or supplied air respirators.

Filtering the breathing air:

- **PAPR:** Once the contamination level has been confirmed, determine the correct filter cartridge to be used for the application, to make sure that you are sufficiently protected. Follow the PX5 PAPR Instruction Manual.

Ventilation and monitoring:

- Make sure that the area is well ventilated and that regular air samples are taken to confirm the atmosphere stays within the levels recommended by the governing bodies.

If you have any questions, ask your employer.

DO NOT ENTER THE WORK AREA if any of the following conditions exist:

- Atmosphere is immediately dangerous to life or health.
- You cannot escape without the aid of the respirator.
- Atmosphere contains less than 21% ±1% oxygen.
- A flammable or explosive atmosphere is present when used with systems including electrical parts that are not intrinsically safe, PX5.
- Contaminants are in excess of regulations or recommendations.
- Contaminants or contaminant concentrations are unknown.
- Work area is poorly ventilated.
- The temperature is outside the range of -10°C to +60°C (14°F to 140°F).

LEAVE THE WORK AREA IMMEDIATELY IF:

- Any product component becomes damaged.
- Vision becomes impaired.
- Airflow stops or slows down, or alarm sounds. Do not use Powered Air Purifying Respirators if airflow is less than 170 lpm (6 cfm).
- Breathing becomes difficult.
- You become dizzy, nauseous, too hot, too cold, or ill.
- Your eyes, nose, or skin become irritated.
- The work area is a confined space (unless proper measures are taken for confined spaces).
- You taste, smell, or see contaminants inside the helmet.
- You have any other reason to suspect that the respirator is not providing adequate protection .

PRODUCT USER SAFETY INSTRUCTIONS CONTINUED

PRODUCT CARE

Never place the hood on hot surfaces. Do not apply paints, solvents, adhesives or self-adhesive labels except as instructed by GVS-RPB. This product may be adversely affected by certain chemicals.

See the "Respirator Setup and Care" section (page 12) for more specific cleaning instructions.

INSTRUCTIONS FOR SPECIFIC USES OR ENVIRONMENTS

Confined Spaces

If this respirator is used in confined spaces, ensure the area is well ventilated and that all contaminant concentrations are below those recommended for this respirator. Follow all procedures for confined space entry, operation, and exit as defined in applicable regulations and standards.

EXPLANATION OF MARKINGS

Helmet Label

Each T200 has a label on the bottom side of the air duct with all relevant certification markings, important use and storage information, the serial number and date of manufacture.

Hood Label

Each hood has a label sewn onto it with warnings and relevant information.

EXPLANATION OF MARKINGS AND SYMBOLS ON THE EQUIPMENT



Read all instructions before use.



Danger of dust and fumes inhalation



Humidity range of storage conditions



Temperature range of storage conditions

RESPIRATOR SETUP AND CARE

HEAD HARNESS WITH TOP STRAPS ASSEMBLY AND ADJUSTMENT

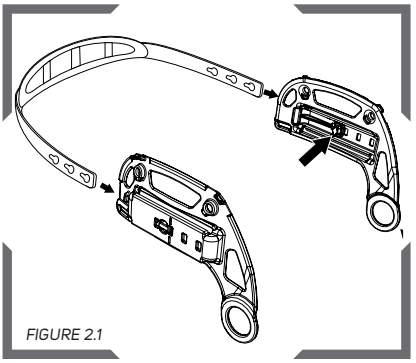

FIGURE 2.1

Attach the front band to the head harness brackets. 1. Slide the ends into the channel on the brackets. 2. Hook the keyhole over the peg in the inside of the bracket. Adjust to fit.

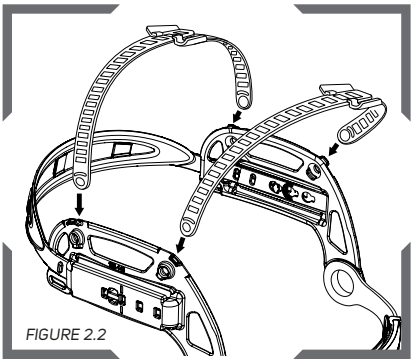

FIGURE 2.2

Attach the top straps to the head harness brackets with the rounded side towards the head. Hook the hole in the straps under the tab on the head harness bracket. Then push the slot on the straps over the top clip on the head harness bracket.

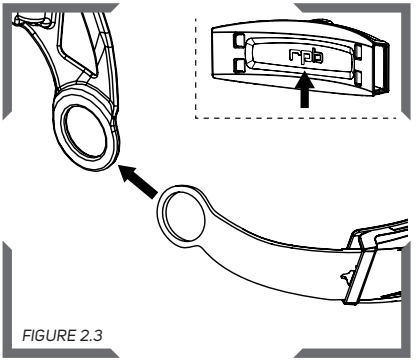

FIGURE 2.3

Align the ratchet assembly so that the RPB logo on the inside pad is up right. Attach the ratchet assembly to the holes in the head harness brackets by (1) sliding the tab on the end of the ratchet band over the hole in the bracket from the inside. 2. Then snap the clip of the ratchet into the hole on the bracket.

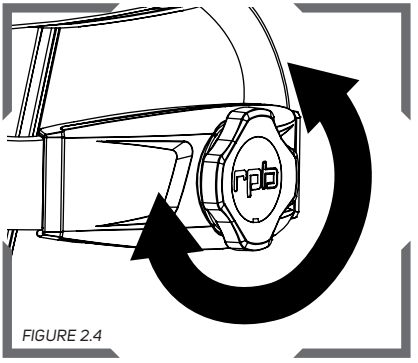

FIGURE 2.4

The head harness can be adjusted with the ratchet adjuster on the back of the headband. Turn the knob to tighten and loosen the headband.

RESPIRATOR SETUP AND CARE CONTINUED

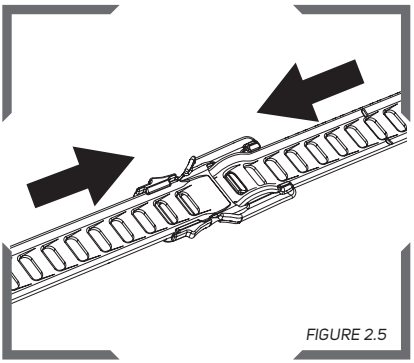

FIGURE 2.5

To make the head harness straps smaller, push the two straps together to tighten.

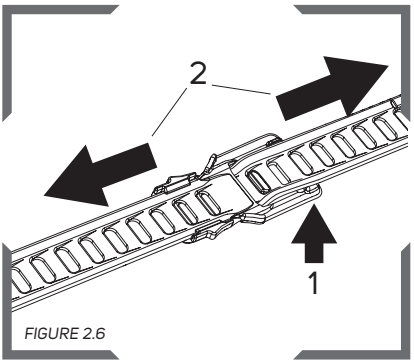

FIGURE 2.6

To make the top straps bigger, 1. unclip the end tabs from over the strap. 2. Then pull the straps apart to the desired notch. Then clip the tabs back over the strap to hold it securely.

BUMP CAP ASSEMBLY

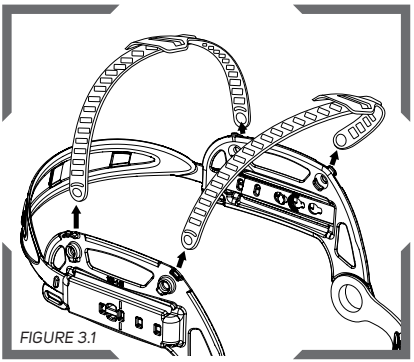

FIGURE 3.1

To remove, pull strap away from the bracket, unhook from the bottom and lift upwards.

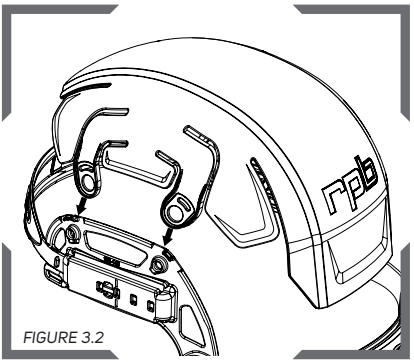

FIGURE 3.2

Attach the bump cap to same mounting locations that the straps were removed from. Hook the hole in the bump cap under the tab on the head harness bracket. Then rotate the bump cap mounting hole over the top clip on the head harness bracket.

NOTE: BUMP CAP ASSEMBLY SHOWN IN FIGURES 4.1-6.5. ALL HEAD HARNESS AND AIR DUCT SETUP INSTRUCTIONS APPLY TO BOTH BUMP CAP (15-850) AND TOP STRAPS (15-841) VERSIONS.

ATTACHING THE LENS MOUNTS

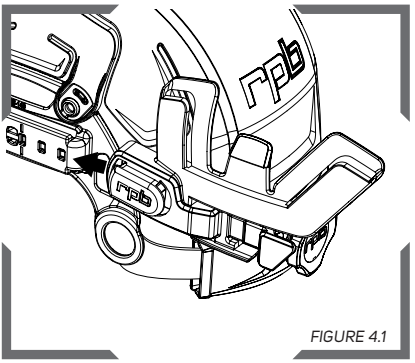

FIGURE 4.1

Align the head harness bracket with the lens mount, lift back tab and push towards the front until at desired position, making sure the tab is secured in the desired position slot. Repeat for the other side.

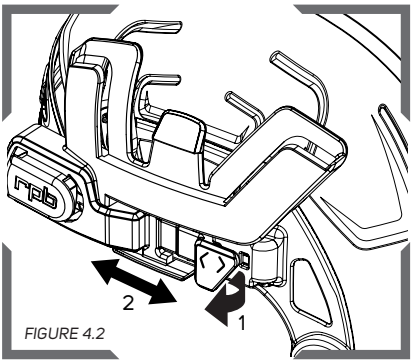

FIGURE 4.2

Adjust the lens mounts using the finger tab to position them forward or back on the mounts. This will bring the lens of the hood closer or farther away from the face.

ATTACHING THE AIR DUCT

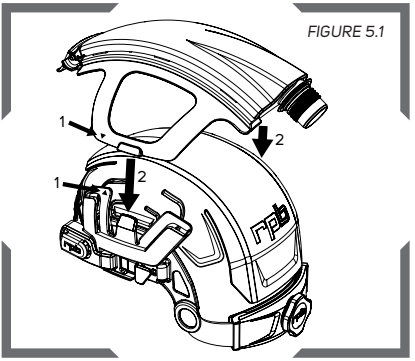

FIGURE 5.1

1. Line up the alignment arrows. 2. Slide the wings of the duct assembly into the "W" shaped slot on the side clips until the middle clip securely snaps over the cross section of the wing.

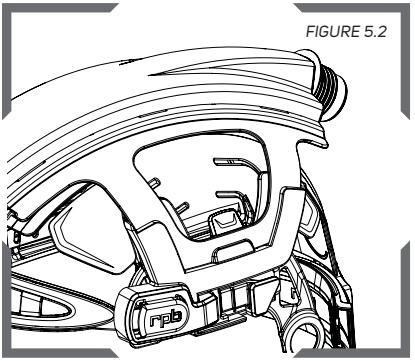

FIGURE 5.2

Duct assembly attached to lens mount.

RESPIRATOR SETUP AND CARE CONTINUED

PLACING THE HEAD SUSPENSION/BUMP CAP AIR DUCT INTO THE HOOD

FIGURE 6.1

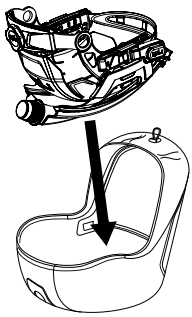

Insert the head suspension or bump cap assembly into the hood.

FIGURE 6.2

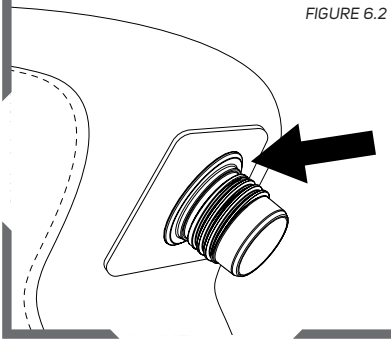

Insert the threaded inlet of the air duct into the black rubber seal on the back of the hood. Starting from the bottom side, stretch the rubber seal over the retaining rib behind the threaded section.

FIGURE 6.3

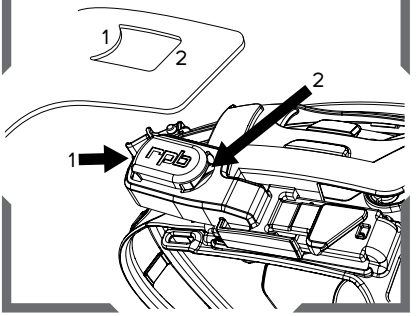

Line up the tabs of the lens with the clips on the sides of the lens mount.
- Hook point 1 **under** point 1 as pictured.
- Snap point 2 **over** point 2 as pictured.

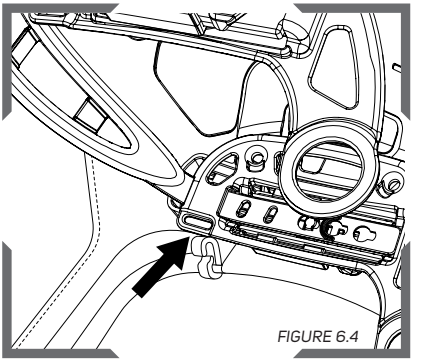

FIGURE 6.4

Insert the attachment clip through the slot on the head harness bracket.

FIGURE 6.5

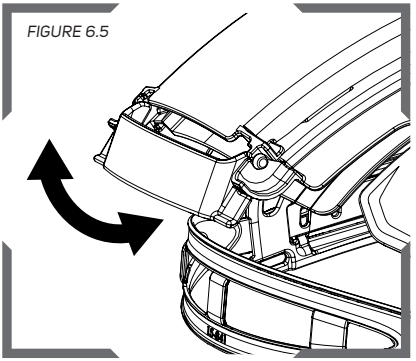

Adjust the airflow director up or down so that the air flows either towards the lens or towards the face.

ATTACH THE BREATHING TUBE

FIGURE 7.1

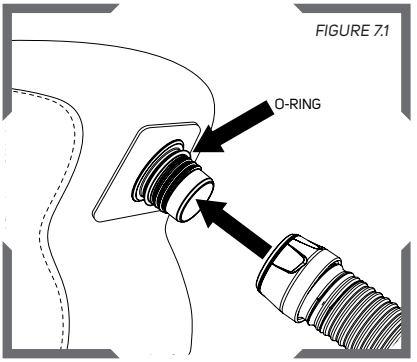

Make sure the o-ring is on the threaded inlet. Attach the breathing tube to the inlet by turning clockwise. Do not over tighten. Hold the hood to prevent it from twisting as the breathing tube is tightened.

POWERED AIR

FIGURE 8.1

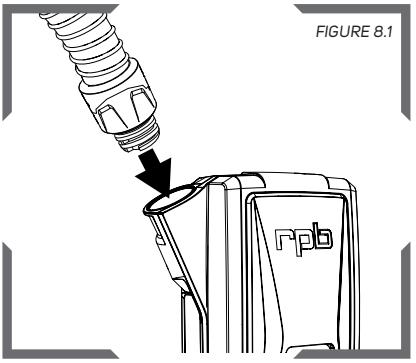

Make sure the flat seal is on the breathing tube coupler. Insert the bayonet end of the breathing tube into the outlet of the PX5 PAPR and complete a half turn clockwise until it is secure.

FOR USE WITH GVS-RPB PX5 - SEE THE PAPR USER MANUAL

When the T200 Respirator is being used in conjunction with the PX5 PAPR, please refer to the PX5 Instruction Manual for set up and use of the assembly.

Note: The PX5 is a Powered Air Purifying Respirator, therefore care must be taken when selecting the correct filter for the application the respirator will be used in.

RESPIRATOR SETUP AND CARE CONTINUED

STETHOSCOPE OR EARMUFF USE

FIGURE 9.1

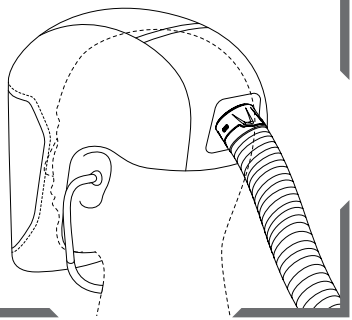

The hood has been designed for the users ears to be exposed so a stethoscope may be used without compromising the users breathing air quality.

FIGURE 9.2

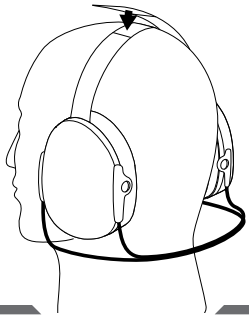

Put on the 18-524 Quiet-Slim earmuffs with the neckband around the back of the neck, making sure the pads seal completely around the ears. Secure the over-head band with the hook and loop strap. Don the hood after putting on the earmuffs.

Refer to the Quiet-Slim earmuff Instruction Manual for more details.

CLEAR-VISION CASSETTE LENSES

FIGURE 10.1

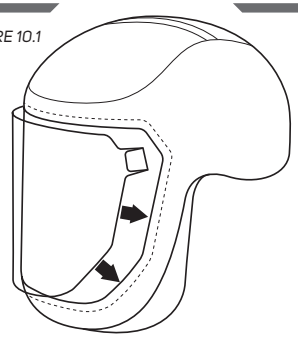

Peel off the backing of the cassette lenses. Apply the cassette to the outside of the lens sewn into the hood.

FIGURE 10.2

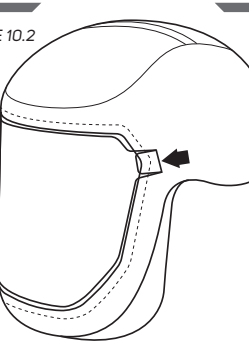

Use the pre-folded tabs to remove each lens as needed.

BROW PAD REPLACEMENT AND CLEANING

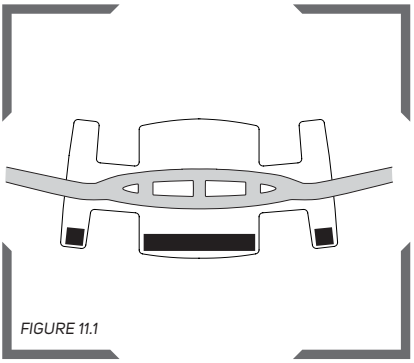

FIGURE 11.1

To remove the brow pad, undo the hook and loop connections. Clean it with mild detergent or replace it with a new one.

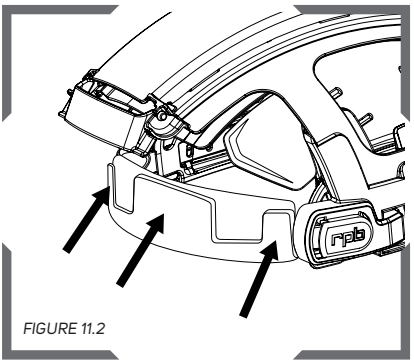

FIGURE 11.2

Place the new or cleaned brow pad onto the inside of the front strap of the head harness. Fold the top and bottom over and secure the hook and loop tabs.

CLEANING THE T200® AND THE BUMP CAP PAD

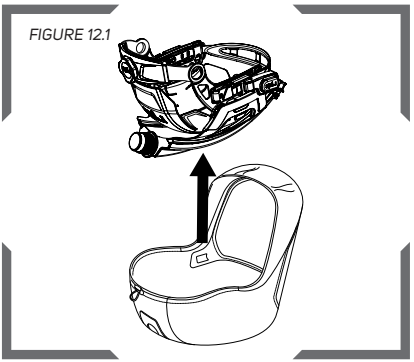

FIGURE 12.1

Remove the head harness or bump cap duct assembly from the hood by unclipping the lens on both sides and pulling the threaded inlet out of the rubber seal on the back.

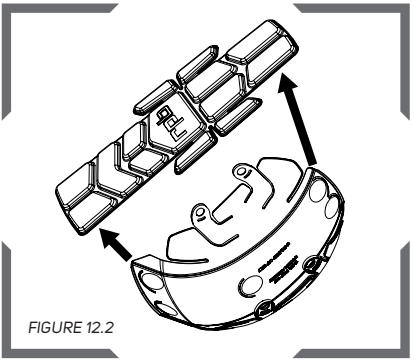

FIGURE 12.2

The bump cap pad is attached to the inside of the bump cap with hook and loop dots. Peel the pad out of the helmet. The pad can be washed with mild detergent or replaced.

Clean the head harness or bump cap and the duct assembly with hot water and mild detergent. Allow to dry before placing back inside of a hood.

DONNING AND DOFFING

DONNING YOUR HOOD

Once you have completed the set up, you are ready to fit your T200 Respirator. Firstly check inside the hood and head harness assembly to ensure that it is free of dust, dirt or contaminants. Ensure the air source is turned on and is flowing. Then open the bottom of the hood, put the respirator onto your head, pull the hood down, adjust the head harness ratchet to fit. Make sure it is sealed with the elastic cord. The seal is designed to sit above the ratchet to allow easy adjustment, but the remainder of the head harness and duct should be fully inside of the hood.

If using a neck seal hood, ensure the neck seal is sealing all of the way around the neck with adjustable elastic cord. Tuck the inner bib in under your coveralls or other outer garment. Pull the outer bib down over your shoulders and make sure it is laying flat on your chest and back so that it does not get in the way of your work.

T200 FACE SEAL HOODS

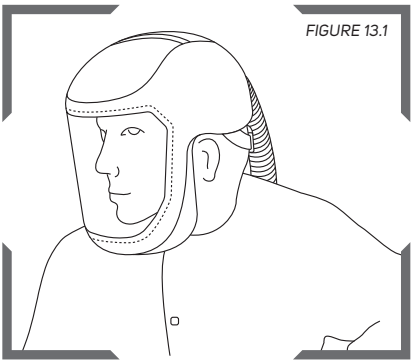

FIGURE 13.1

Open the bottom of the hood with the air flowing from the air source, put the respirator onto your head. Make sure the hood is centered on your head.

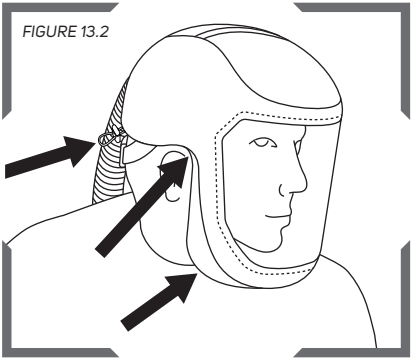

FIGURE 13.2

Pull the hood down and tighten the head harness ratchet to fit. Make sure that the adjustable elastic cord is sealing around under the chin, up the cheeks, over the ears and around the back of the head.

⚠ WARNING **Always check the interior of the respirator for contaminants before donning. Always don and doff the helmet while outside the work area, keeping the interior of the hood clean and free of contaminants. Not doing these steps could expose you to hazardous materials, and contaminants that could impair the function of the respirator.**

T-LINK NECK SEAL HOODS

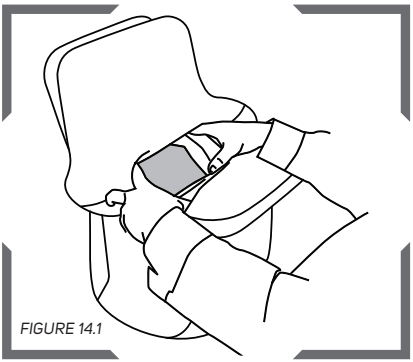

FIGURE 14.1

With the air source turned on and flowing, open the bottom of the hood, put the respirator onto your head. Make sure the hood is centered on your head.

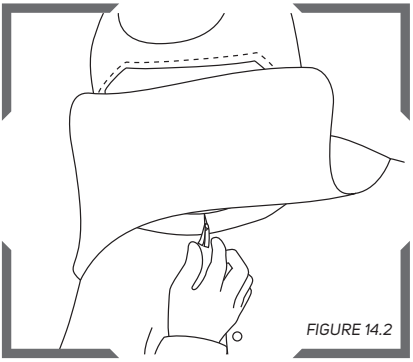

FIGURE 14.2

Pull the hood down, adjust the head harness ratchet to fit, and make sure the neck seal is sealing around your neck, making sure the elastic is cinched securely.

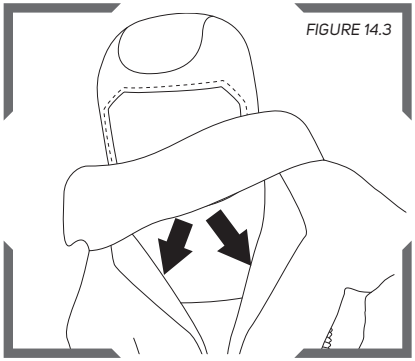

FIGURE 14.3

Tuck the inner bib into the collar of your shirt, coveralls, or protective gear to prevent contaminants from entering the hood. Pull the outer bib down.

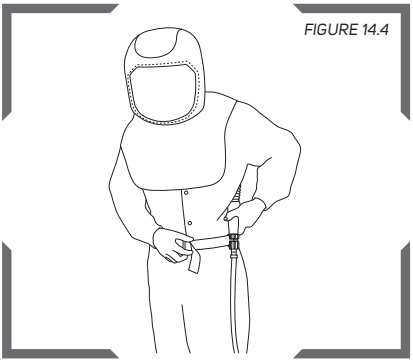

FIGURE 14.4

Fasten the flow control device belt around your waist and over your hips.

DOFFING YOUR HOOD

When you have finished working, keep the respirator on with air flowing into the hood until you have left the contaminated area. Depending on the contaminants, it may be advisable to clean the exterior of the hood and your work garments in a decontamination shower before removing the respirator. A workplace cleaning program may be necessary.

DONNING AND DOFFING CONTINUED

INSPECTION

If the hood or the breathing tube are contaminated or show excessive wear, dispose of the hood or breathing tube according to federal and local regulations. Keep the head harness or bump cap/duct assembly and breathing tube for future use if they are in good condition.

STORAGE

Before storing the respirator, clean the unit following the cleaning instructions in this instruction manual. After use, store the respirator by hanging it up in a clean, dry place, away from the work area. If the T200 isn't going to be used for a longer period of time, store in a container or a bag. Store in a cool dry place between -10°C to +45°C (14°F to 113°F) <90% RH. PX5 may need to be stored separately, refer to the PX5® Instruction manual for specific storage instructions.

After use:

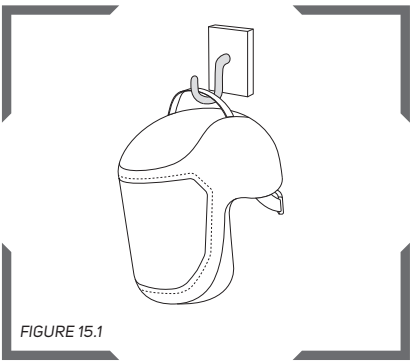

FIGURE 15.1

Long term storage:

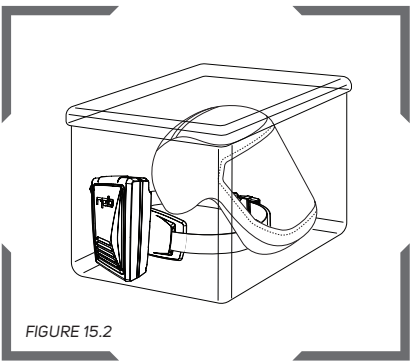

FIGURE 15.2

PRODUCT CARE INSTRUCTIONS

Hoods are intended to be disposable. If washing is needed, hand wash only. It is recommended to establish a regular cleaning schedule for the padding to ensure good hygiene. It is recommended to establish a regular cleaning schedule for the padding and capes to ensure good hygiene.

- Hoods and face seals: Hand wash only with mild detergent and warm water. Hang to dry. Do not launder in a washing machine or dryer. If laundered in a washer or dryer, product life will be reduced and warranty voided.
- Padding: Hand wash only with mild detergent and warm water. Lay flat to dry.

Make sure all components are dry before use. Inspect for wear and tear and replace if damaged or excessively worn.

Do not run water or detergents inside of the breathing tube.

PARTS AND ACCESSORIES

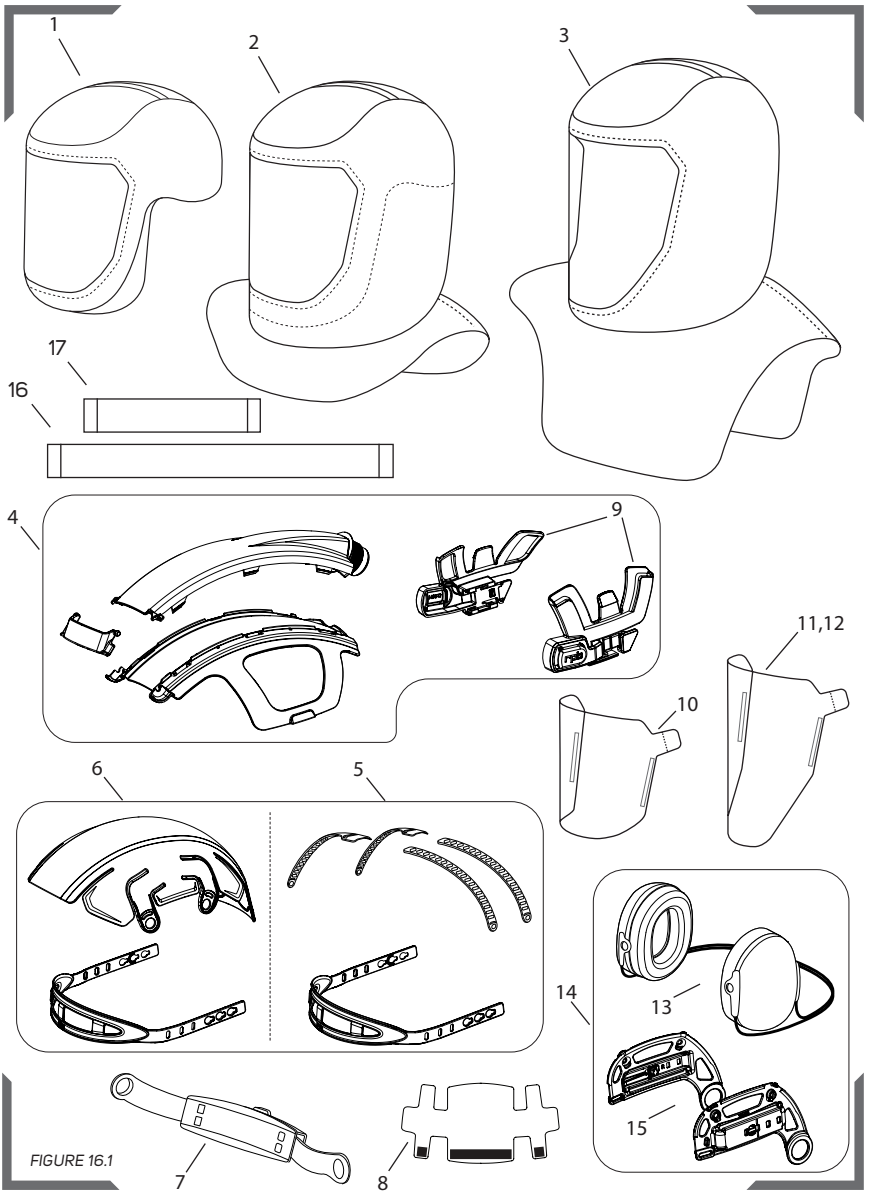

FIGURE 16.1

GVS | rpb T200™

Protecting you for life's best moments.

PARTS LIST

Item Number	Description	Part Number
1	T200 Tychem® 2000 - Face Seal Hood	17-722
2	T200 Tychem® 2000 - Shoulder Length Hood Internal Face Seal	17-732
3	T-Link Tychem® 2000 - Full Hood w/Neck Seal	17-712
	T-Link Tychem® 4000 - Full Hood w/Neck Seal, Sealed Seams	17-713
	T-Link Tychem® 4000 - Extra Long Full Hood w/Neck Seal, Sealed Seams, Safety Lens	17-713-SX
4	Air Duct Assembly (15-861) with lens mounts (17-513) (Not for sale)	15-860
	Air Duct Assembly (15-860) with 15-841, 16-530	15-870
5	Head Harness Assembly	15-841
6	Bump Cap Harness Assembly	15-850
7	Head Harness Ratchet Assembly	16-530
8	Head Harness Brow Pad	16-526
9	Lens Mounts (Pair)	17-513
10	T200 Clear-Vision Casette Lens (1 cassette of 7 lenses) (Pack of 10) - for face seal hoods (short lens)	17-811
11	T-Link Clear-Vision Casette Lens (1 cassette of 7 lenses) (Pack of 10) - for full length hoods (long lens)	17-817
12	T-Link Peel-Off Lenses (Pack of 25) - for full length hoods (long lens)	17-815
13	Quiet-Slim Helmet Earmuffs	18-524
14	Quiet-Slim Helmet Earmuffs with harness mounts (pair)	18-525
15	Harness Mounts (Pair)	15-842
16	Tychem® Breathing Tube Cover	04-852
	Clear Plastic Breathing Tube Cover (pack of 10)	04-856
17	Tychem® Breathing Tube Cover for backpack	04-872

⚠ WARNING **Use only exact, authentic GVS-RPB replacement parts (marked with the GVS-RPB logo and part number), and only in the specified configuration. Using incomplete or inappropriate equipment, including the use of counterfeit or non-GVS-RPB parts, can result in inadequate protection and will void the approval of the entire respirator assembly.**

PAPR PARTS AND ACCESSORIES

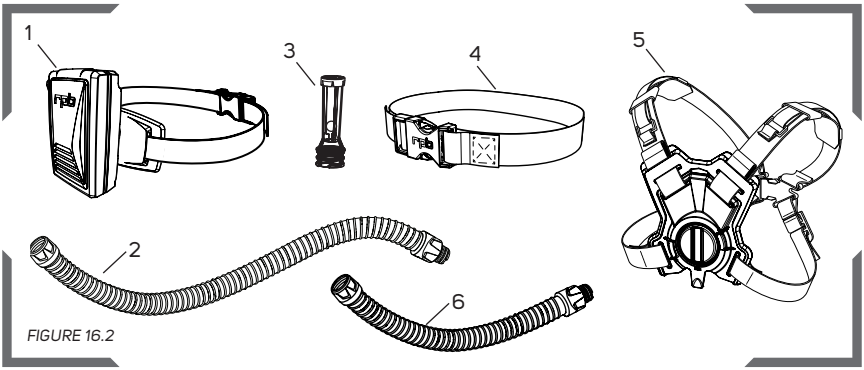

FIGURE 16.2

Item Number	Description	Part Number
1	PX5 PAPR and Belt	03-801
2	PAPR Breathing Tube	04-831
3	PAPR Flow Meter	03-819
4	2" Belt	07-765
	Easy Clean 2" Belt	07-765-DC
5	Easy Clean Backpack Assembly	03-822-DC
6	Short Breathing Tube for Backpack Assembly	04-841

GVS | rpb T200™

Protecting you for life's best moments.

LIMITED WARRANTY

RPB® warrants that its Products will be free from defects in materials and workmanship for one (1) year, subject to the terms of this limited warranty. The Products are sold only for commercial use, and no consumer warranties apply to the Products. This limited warranty is for the benefit of the original Product purchaser, and cannot be transferred or assigned. This is the sole and exclusive warranty provided by RPB®, and ALL CONDITIONS AND IMPLIED WARRANTIES (INCLUDING ANY WARRANTY OF MERCHANTABILITY OR FITNESS FOR A PARTICULAR PURPOSE) ARE EXCLUDED AND DISCLAIMED FROM WARRANTY COVERAGE. RPB's® limited warranty coverage does not apply to damage resulting from accident, improper use or misuse of the Products, wear and tear resulting from the normal use of the Products, or the failure to properly maintain the Products.

RPB's® limited warranty coverage runs from the original date of purchase of the Products, and applies only to warranted defects which first manifest themselves and are reported to RPB® within the warranty period. RPB® retains the right to determine to its reasonable satisfaction whether any claimed defect is covered by this limited warranty.

If a warranted defect occurs, RPB® will repair or replace the defective Product (or a component of the Product), in its sole discretion. This "repair or replacement" remedy is the sole and exclusive remedy under this limited warranty, and under no circumstances shall RPB's® liability under this limited warranty exceed the original purchase price for the Products (or the applicable component). RPB® has no responsibility for incidental or consequential damages, including loss of use, maintenance and other costs, and ALL INCIDENTAL AND CONSEQUENTIAL DAMAGES ARE EXCLUDED AND DISCLAIMED from this limited warranty. Contact RPB® to obtain warranty service. Proof of purchase must be provided to obtain warranty service. All costs of returning the Products to RPB® for warranty service must be paid by the purchaser.

RPB® reserves the right to improve its Products through changes in design or materials without being obligated to purchasers of previously manufactured Products.

LIABILITY

RPB® Safety cannot accept any liability of whatsoever nature arising directly or indirectly from the use or misuse of RPB® Safety products, including purposes that the products are not designed for. RPB® Safety is not liable for damage, loss or expense resulting from the failure to give advice or information or the giving of incorrect advice or information, whether or not due to RPB® Safety's negligence or that of its employees, agents or subcontractors.

NOTES

ISO9001
CERTIFIED COMPANY

OTHER PRODUCTS

RPB PX5 PAPR

The RPB PX5 is a compact and versatile PAPR that changes the way people experience clean filtered air across multiple industries – from medical and chemical settings, to the profoundly harsh environments of foundries. Boasting a sleek lightweight design, the PX5 contours to the users back, evenly distributing weight through its vertical mounting. With simple considered edges, curves and sealed housing unit, the PX5 is certified to meet IP65 in use for ease of decontamination.



RPB® QUIET-SLIM™ EAR DEFENDERS

The RPB® Quiet-Slim™ ear defenders can be worn with the T200® or the Z4® with no modifications. Combine with bell shaped earplugs for the ultimate in hearing protection.



RPB GX4® GAS MONITOR

The RPB GX4 Gas Monitor gives you complete confidence that the supplied/ compressed air you and your employees breathe is safe. Detecting when there are dangerous levels of toxic gases and utilizing smart device and cloud integration capabilities, the GX4 enables you to view your air quality from any device, in real time.



MAN-87

gvs-rpb.com | 1-866-494-4599

GVS | rpb

Protecting you for life's best moments.