Protecting you for life's best moments.

Instruction Manual
Z-Link® Respirator

Employers: Read this manual and the flow control device instruction manual and carry out the employer responsibilities (page 10).

Product users: Read this manual and the flow control device instruction manual and follow the product user safety instructions (page 11).

Manuals are regularly updated. Make sure this manual is available to all users for reference.

Current version of manual and other languages: gvs-rpb.com/resources



PRODUCT CERTIFICATION

BSI Certified Product

AS/NZS 1716:2012
BMP# 714303
RESPIRATORY PROTECTION

AS/NZS 1801:1997
BMP# 714306
HARD HAT PROTECTION

AS/NZS 1337.1:2010
BMP# 714304
EYE & FACE PROTECTION

CE 2797

UKCA 0086

EN14594:2018 3B
EN12941:2023 TH3/2
RESPIRATORY PROTECTION
See instruction manual for protection levels.

EN352-3:2020
HEARING PROTECTION
Only in conjunction with 18-533 earmuffs.

EN397:2012+A1:2012
HARD HAT PROTECTION
Conforms to impact and optional clauses.

EN166:2001 CLASS 1 BT 9 3
EYE & FACE PROTECTION

EN English P.2

Protecting you for life's best moments.

CONTENTS

- ■ EXPLANATION OF SIGNAL WORDS AND SYMBOLS 2
- ■ INTRODUCTION 4
- ■ IMPORTANT SAFETY INFORMATION
  - ☐ PROTECTION PROVIDED AND LIMITATIONS 4
  - ☐ RESPIRATORY COMPONENT DIAGRAMS - CAUTIONS & LIMITATIONS 8
  - ☐ AIR SOURCE, FITTINGS, AND PRESSURE 10
  - ☐ EMPLOYER RESPONSIBILITIES 11
  - ☐ PRODUCT USER SAFETY INSTRUCTIONS 12
  - ☐ BREATHING AIR PRESSURE TABLE 16
- ■ SETUP AND CARE
  - ☐ STANDARD CONFIGURATION 17
  - ☐ Z-LINK+® (WELDING) CONFIGURATION 28
- ■ DONNING AND DOFFING 37
- ■ STORAGE 38
- ■ COMMUNICATIONS
  - ☐ COMMS-LINK™ COMMUNICATION SYSTEM 39
  - ☐ RADIO CONNECTOR COMPATIBILITY 41
- ■ PARTS AND ACCESSORIES 43
- ■ WARRANTY AND LIABILITY STATEMENT 51

EXPLANATION OF SIGNAL WORDS AND SYMBOLS

The following signal word and safety symbols are used in this manual and product labeling:

⚠ WARNING **WARNING** indicates a hazardous situation that, if not avoided, could result in death or serious injury.

⚠ DANGER **DANGER** Indicates a hazardous situation that, if not avoided, will result in death or serious injury.



Read the Instruction Manual.
Additional copies of GVS-RPB® manuals can be found at gvs-rpb.com.

CERTIFIED BY:

CE: BSI Group The Netherlands B.V. (NB2797), Say Building, John M. Keynesplein 9, 1066 EP, Amsterdam, NL

UKCA: BSI Group (AB0086), Kitemark Court, Knowhill, Milton Keynes MK5 8PP, United Kingdom

GVS-RPB® Safety - Global Headquarters
2807 Samoset Rd, Royal Oak, MI 48073, USA
T: 1-866-494-4599 F: 1-866-494-4509 E: sales@gvs.com

GVS S.p.A. - EMEA
Via Roma 50, 40069 Zona Industriale BO, Italy
T: +39 0516176391 E: sales@gvs.com

GVS Filter Technology UK Ltd.
Caton Road, Lancaster, Lancashire, UK, LA1 3PE
T: +44 (0)1524 847600 E: sales@gvs.com

gvs-rpb.com

Copyright ©2025 GVS-RPB Safety, LLC. All rights reserved. All materials contained on this website are protected by United States copyright law and may not be reproduced, distributed, transmitted, displayed, published or broadcast without the prior written permission of GVS-RPB Safety, LLC. You may not alter or remove any trademark, copyright or other notice from copies of the content.

All trademarks, service marks, and logos used in this publication, both registered and unregistered, are the trademarks, service marks, or logos of their respective owners. All rights in the GVS-RPB Intellectual Property contained in this publication, including copyright, trademarks, service marks, trade secret, and patent rights are reserved. GVS-RPB Intellectual Property means any patent, patented articles, patent applications, designs, industrial designs, copyrights, software, source code, database rights, moral rights, inventions, techniques, technical data, trade secrets, know-how, brands, trademarks, trade names, slogans, logos, and any other common law and proprietary rights, whether registered or unregistered anywhere in the world, that are owned by, developed in whole or in part by, or licensed by GVS-RPB Safety, LLC.

For technical assistance contact our Customer Service Department at 1-866-494-4599 or email: sales@gvs.com

Form #: 7.20.542
Rev: 13

GVS-RPB Safety LLC is an ISO9001 certified company.

Protecting you for life's best moments.

INTRODUCTION

The Z-Link® is a multiuse respirator for a number of different applications where there is a need for protection from airborne contaminants, eye/face protection and head protection; such as welding, grinding, construction and other industrial applications. The optional Quiet-Link™ Ear Defender earmuff system can add hearing protection. The Z-Link+® is an optional welding visor attachment. It allows the user to quickly switch between the standard configuration and the welding configuration. Additionally, the Vision-Link™ light attachment is available to provide light to the work area and the Comms-Link™ in-helmet communication system allows for hands free radio communication.

This product must be inspected and maintained in accordance with this instruction manual at all times.

See PROTECTION PROVIDED AND LIMITATIONS for details.

IMPORTANT SAFETY INFORMATION

⚠ WARNING Improper selection, fit, use, or maintenance of this product can result in injury; life threatening delayed lung, skin or eye disease; or death.

This product is intended for occupational use in accordance with applicable standards or regulations for your location, industry, and activity (see Employer Responsibilities, page 10). Familiarity with standards and regulations related to the use of this protective equipment is recommended, even if they do not directly apply to you. If self-employed or if used in a non-occupational setting, refer to Employer Responsibilities and Product User Safety Instructions. Go to gvs-rpb.com/important-safety-information for helpful links to CE standards and other content.

EMPLOYERS: Read this manual and the air supply device Instruction Manual and carry out the Employer Responsibilities (page 10).

PRODUCT USERS: Read this manual and the air supply device Instruction Manual and follow the Product User Safety Instructions (page 11).

CHECK WEBSITE FOR UPDATES. Product manuals are regularly updated. Visit gvs-rpb.com/resources for the most recent version of this manual before using the product.

PROTECTION PROVIDED AND LIMITATIONS

RESPIRATION

The GVS-RPB Z-Link is approved in the categories as follows:

Powered Air

The GVS-RPB Z-Link Respirator, when properly fitted and used with all required components, including the Breathing Tube Assembly and the GVS-RPB PX5® Powered Air Purifying Respirator, is an EN 12941:2023. As such, it significantly reduces, but does not completely eliminate, the breathing of contaminates by the respirator wearer. Specific protection depends

on the filter selected for use in the GVS-RPB PX5 PAPR (see the GVS-RPB PX5 Instruction Manual).

Head-top Classifications *TABLE 1.1*

AIR SOURCE	RESPIRATOR HEAD-TOPS	EN 12941 CLASSIFI-CATION	NOMINAL PROTECTION FACTOR	BREATHING TUBES 04-831 04-841	HEPA FILTER	COMBI-NATION FILTERS
PX5	Z-LINK Shoulder Cape - Zytec 16-721	TH3	500	✓	✓	✓
PX5	Z-LINK Shoulder Cape - Tychem 16-723	TH3	500	✓	✓	✓
PX5	Z-LINK Shoulder Cape - Aluminized 16-724	TH3	500	✓	✓	✓
PX5	Z-LINK Face Seal - Zytec 16-711	TH2	50	✓	✓	✓
PX5	Z-LINK Face Seal - Tychem 16-712	TH2	50	✓	✓	✓
PX5	Z-LINK Chin Seal - Zytec 16-731	TH2	50	✓	✓	✓
PX5	Z-LINK Chin Seal - Tychem 16-733	TH2	50	✓	✓	✓

The EN 12941 standard defines three classes of performance (TH1, TH2 and TH3). The numbers define the level of performance (inward leakage) and the pull strength of the breathing tubes and couplings within the classification. Inward leakage for classification TH1 is maximum 10%, for TH2 maximum 2% and for TH3 maximum 0.2%.

Supplied Air

The GVS-RPB Z-Link Respirator, when properly fitted and used with all required components, including the Breathing Tube Assembly, 03-102 Constant Flow Valve or 03-502 C40™ Climate Control Device, and GVS-RPB Breathing Air Line is an EN 14594: 2018 Class 3B F approved respirator with a nominal protection factor of 500. As such, it significantly reduces, but does not completely eliminate, the breathing of contaminates by the respirator wearer. Use with an airline filter, such as the 04-900 GVS-RPB RADEX® Airline Filter. Specific protection depends on the setup of the airline filter (see the GVS-RPB RADEX Instruction Manual).

HAZARD LIMITATIONS

The GVS-RPB Z-Link Respirator is **NOT FOR USE** if:

- In atmospheres immediately dangerous to life or health (IDLH).

PROTECTION PROVIDED AND LIMITATIONS CONTINUED

- Wearer cannot escape without the aid of the respirator.
- Atmosphere contains less than 21% ±1% oxygen.
- In abrasive blasting applications.
- For protection against hazardous gases (e.g., carbon monoxide).
- Contaminants are in excess of regulations or recommendations.
- Contaminants or contaminant concentrations are unknown.
- Work area is poorly ventilated.
- The temperature is outside the range of -30°C to +50°C (-22°F to 122°F).
- Used with systems including electrical parts, PX5, Vision-Link, 16-922 Comms-Link, 09-913 PTT, or 18-534 SENA® do not use when a flammable or explosive atmosphere is present.

FACE AND EYES:

- The Z-Link **Visor** with **Safety Lens** is approved to EN 166:2001 1 BT 9 3 (AS/NZS 1337.1:2010) requirements and is designed for grinding, painting, and other industrial applications.
- The Z-Link **Welding Visor** with **Impact Lens** and Auto-Darkening Welding Protection Filter (ADF) is approved to AS/NZS 1337.1:2010 requirements and is designed to protect the operator's face and head against sparks and hazardous ultraviolet and infrared rays emitted during the welding process. See "Auto-Darkening Welding Protection Filter" (page 31) for information about ADF capabilities and use. Use an approved GVS-RPB welding cape for adequate protection from sparks, debris, and light flashes.
- The Z-Link is not designed or tested to provide protection against corrosive liquids.
- **Note:** the Z-Link does not protect against the potential transfer of impact to glasses worn underneath the Visor. Z-Link visors do not provide complete eye and face protection against severe impact and penetration and are not a substitute for good safety practices and engineering controls.

HEAD:

- The Z-Link conforms to impact and optional clauses of EN 397:2012+A1:2012 LD -30°C MM 440V A.C. (AS/NZS 1801:1997) requirements for physical head protection as a hard hat with following ratings:
  - ☐ Very low temperature: -30°C (-22°F) as appropriate
  - ☐ Very high temperature: +50°C (122°F)
  - ☐ Electrical insulation: 440 V a.c.
  - ☐ Lateral deformation: LD
  - ☐ Molten metal splash: MM

  The helmet is designed to provide limited head protection by reducing the force of falling objects striking the top of the head. Ensure the helmet is adjusted to properly fit the user by adjusting the head harness and side pads or Quiet-Link if installed.

HEARING:

- When used with the Z-Link, the Quiet-Link Ear Defender system provides a Noise Reduction Rating (NRR) of 25db to meet EN 352-3:2020. Refer to the Quiet-Link

instruction manual to ensure proper installation and fit .

- When used with the Z-Link, the SENA® Tufftalk M-02 system provides a Noise Reduction Rating (NRR) of 31db to meet EN 352-3:2020. Refer to the SENA® Tufftalk M-02 instruction sheet to ensure proper installation and fit .
- Hearing protection must be worn and properly fitted when exposed to noise levels that exceed the permissible exposure levels. It is require that additional hear protection is worn under this respirator, such as the 18-533 Quite Link Ear Defenders, 18-534 SENA® Tufftalk M-02, or a pair of Foam or Silicon Earplug with an SNR 25 rating or higher.
- Hearing protection must be worn with the 03-822 back pack with the 03-841 short breathing tube configuration when used with the gas filters.
- When using the Radiant Heat components, it is required to use earplugs instead of earmuffs.

The Z-Link is a loose fitting respirator, caution is required when used in high winds.

PPE REGULATION:

- The Z-Link conforms to the PPE Regulation (EU) 2016/425. Regulation 2016/425 on PPE as brought into UK Law and amended.
- The Declaration of Conformity for CE and UKCA can be found at gvs-rpb.com/resources
- See the Storage section for information on packaging and protection required for transportation.

EXPLANATION OF MARKINGS

Helmet Label

Each Z-Link has a label on the inside of the helmet shell with all relevant certification markings, important use and storage information, the serial number and date of manufacture.

Breathing Air Line (Supply Tube)

Each Breathing Air Line has a label with manufacturer information and date of manufacture, as well as being laser engraved on the tube.

Cape Label

Each cape has a label sewn onto it with warnings and relevant information.

⚠ WARNING **When connected to a mobile compressed air supply system it is recommended, but not required to be operated with an assistant. When using supplied air pay special attention to flow indicator warning device, and with PAPR, the audible and vibration warnings, especially when ear defenders or sound attenuating communications equipment is used, the reduction of the audibility of the warning shall be considered.**

EXPLANATION OF MARKINGS AND SYMBOLS ON THE EQUIPMENT



Read all instructions before use.



Danger of dust and fumes inhalation



Humidity range of storage conditions



Temperature range of storage conditions

RESPIRATOR COMPONENT DIAGRAM - PAPR

The GVS-RPB Z-Link is one component of the three main components that constitute a powered air purifying respirator.

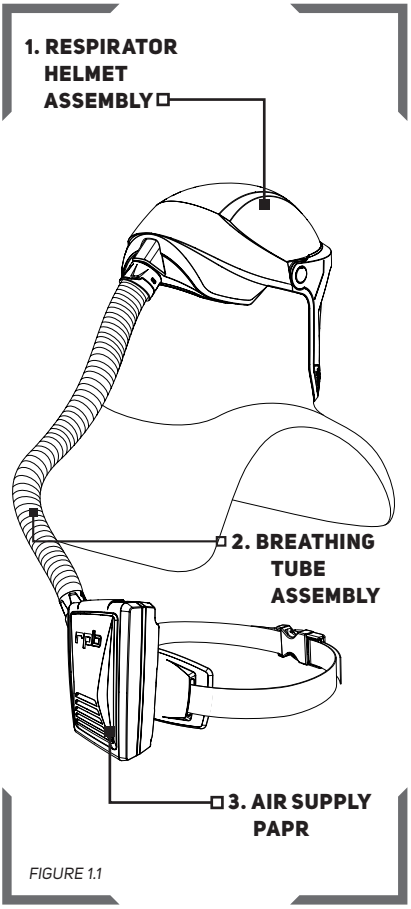

FIGURE 1.1

CAUTIONS AND LIMITATIONS

POWERED AIR

A. Not for use in atmospheres containing less than 21% ±1% oxygen.
B. Not for use in atmospheres immediately dangerous to life or health.
C. Do not exceed maximum use concentrations established by regulatory standards.
F. Do not use Powered Air-Purifying Respirators if airflow is less than 180 lpm (6.4 cfm) for PX5.
H. Follow established cartridge and canister change schedules or observe ESLI to ensure that cartridge and canisters are replaced before breakthrough occurs.
I. Contains electrical parts that may cause an ignition in flammable or explosive atmospheres.
J. Failure to properly use and maintain this product could result in injury or death.
L. Follow the manufacturer's User's Instructions for changing cartridges, canister and/or filters.
M. All approved respirators shall be selected, fitted, used and maintained in accordance with applicable regulations.
N. Never substitute, modify, add or omit parts. Use only exact replacement parts in the configuration as specified by the manufacturer.
O. Refer to User Instructions, and/or maintenance manuals for information on use and maintenance of these respirators.
P. The Z-Link is not evaluated as a respirator for use as a surgical mask.

RESPIRATOR COMPONENT DIAGRAM - SAR

The GVS-RPB Z-Link Supplied Air Respirator consists of 3 main components. All 3 components must be present and properly assembled to constitute a complete approved respirator.

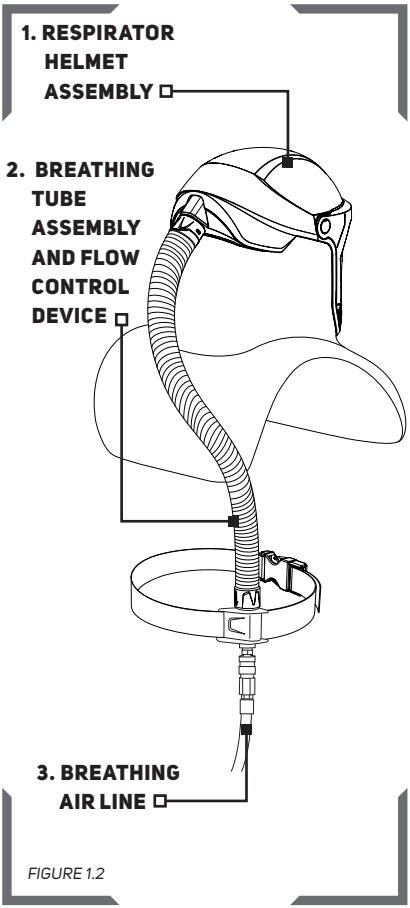

FIGURE 1.2

CAUTIONS AND LIMITATIONS

SUPPLIED AIR

A. Not for use in atmospheres containing less than 21% ±1% oxygen.
B. Not for use in atmospheres immediately dangerous to life or health.
C. Do not exceed maximum use concentrations established by regulatory standards.
D. Air-line respirators can be used only when the respirators are supplied with respirable air meeting the requirements of EN 12021 (AS/NZS 1715) or higher quality.
E. Use only the pressure ranges and hose lengths specified in the user's instructions.
J. Failure to properly use and maintain this product could result in injury or death.
L. Follow the manufacturer's User's Instructions for changing cartridges, canister and/or filters.
M. All approved respirators shall be selected, fitted, used and maintained in accordance with applicable regulations.
N. Never substitute, modify, add or omit parts. Use only exact replacement parts in the configuration as specified by the manufacturer.
O. Refer to user's instructions, and/or maintenance manuals for information on use and maintenance of these respirators.
S. Special or Critical User Instructions and/or specific limitations apply. Refer to "S-Special or Critical User Instructions" on page 16 before donning.

AIR SOURCE, FITTINGS, AND PRESSURE

AIR SOURCE

Powered Air

Check that the contaminated area is within the limits of use for a Powered Air Purifying Respirator and determine the type of contamination. Once the contamination level has been confirmed you can then determine the filter cartridge to be used for the application, to make sure that you are sufficiently protected. Make sure that the area is well ventilated and that regular air samples are taken to confirm the atmosphere stays within the levels recommended by governing bodies. Follow the PX5 PAPR Instruction Manual for more details.

TABLE 1.2

AIR FLOW	MMDF: 170slpm (6cfm). Speed 1: Greater than 180slpm (6.4cfm). Speed 2: Greater than 205slpm (7.2cfm) Speed 3: Greater than 230slpm (8.1cfm)

Supplied Air

Locate the air source in a clean air environment, always use a filter on the inlet of your air source. Make sure the air source is somewhere that vehicles, forklifts, and other machinery are not running near the air inlet, as this will cause carbon monoxide to be drawn into your air supply. Always use suitable after coolers/dryers with filters and carbon monoxide alarms to ensure clean breathable air is supplied at all times. A Radex Airline Filter (04-900) and a GX4® Gas Monitor (08-400) are recommended. The air should be regularly sampled to ensure that it meets EN 12021 (AS/NZS 1715) requirements.

AIR QUALITY

This respirator must be supplied with clean breathable air at all times. Breathable air must at least meet the requirements for EN 12021 (AS/NZS 1715). The GVS-RPB Z-LINK does not purify air or filter contaminants. A carbon monoxide monitor must be used at all times.

⚠ DANGER Do not connect the respirator's air supply hose to nitrogen, toxic gases, inert gases or other unbreathable non-EN 12021 (AS/NZS 1715) air sources. Check the air source before using the respirator. This apparatus is not designed for use with mobile air supply systems i.e. cylinders. Connecting the supply hose to a non-breathable air source will result in serious injury or death.

BREATHING AIR SUPPLY HOSES AND FITTINGS

GVS-RPB air supply hoses and fittings must be used between the point of attachment and the respirator breathing air connection at the wearer's belt. The hose sections must be within the correct length and the amount of sections must be within the number specified in the breathing air pressure table on page 16.

BREATHING AIR PRESSURE

The air pressure must be continually monitored at the point of attachment. Air pressure must be read from a reliable pressure gauge whilst the respirator has air flowing through it.

EMPLOYER RESPONSIBILITIES

Your specific responsibilities may vary by location and industry, but in general GVS-RPB expects that employers will:

- **Follow all applicable standards and regulations for your location, industry, and activity.** Depending on your location and industry, a number of standards and regulations may apply to your selection and use of respirators and other personal protective equipment. These may include such things as federal, local, or military standards and regulations and consensus standards such as EN/UK and AS/NZS. There are also requirements specific to particular contaminants, e.g. silica (see gvs-rpb.com/important-safety-information for more information), asbestos, organic pathogens, etc. Know which requirements apply to your location and industry.
- **Have appropriate safety programs in place.**
  Have and follow:
  - ☐ A workplace safety program.
  - ☐ A written respiratory protection program in accordance with applicable standards and regulations.
- **In accordance with the above**,
  - ☐ **Perform a hazard analysis and select appropriate equipment for each activity.** A hazard analysis should be performed by a qualified person. Controls should be in place as appropriate and a qualified person should determine what kind of respiratory, face and eye, head, and hearing protection is appropriate for the intended activities and environments of use. (For example, select a respirator appropriate to the specific airborne hazards, with consideration of workplace and user factors and with a Nominal Protection Factor that meets or exceeds the required level for employee protection, select welding face and eye protection appropriate to the type of welding to be done, etc.)

    As applicable, check your workplace safety program, respiratory protection program, and standards and regulations for your activity or industry for related protection requirements, and see this manual (Protection Provided and Limitations, page 4) and the PX5 PAPR or flow control device Instruction Manual for product specifications.
  - ☐ **Be sure employees are medically qualified to use a respirator.**
    Have a qualified physician or other licensed health care professional (PLHCP) perform medical evaluations using a medical questionnaire or an initial medical examination.
  - ☐ **Train employees in the Z-Link's use, maintenance, and limitations.**
    Appoint a qualified individual who is knowledgable about the GVS-RPB Z-LINK to provide

AIR SOURCE, FITTINGS, AND PRESSURE CONTINUED

training:

Qualifications of the Respirator Trainer. Anyone providing respirator training shall:

a) be knowledgable in the application and use of the respirator(s);
b) have practical knowledge in the selection and use of respirator(s) and work practices at the site;
c) have an understanding of the site's respirator program; and
d) be knowledgable of applicable regulations.

Train each Z-LINK user in the product's use, application, inspection, maintenance, storage, fitting, and limitations in accordance with the content of this Instruction Manual and the approved flow control device Instruction Manual and standard or regulatory requirements. Ensure that each intended user reads both these manuals.

☐ **Ensure that equipment is properly set up, used, and maintained.**
Make sure that equipment is properly set up, inspected, fitted, used, and maintained, including selection of the appropriate air filter cartridge and, when applicable, welding filter shade adjustments, for the application.

- Z-Link has a shelf life of 5 years from the date of manufacture.
- Z-Link has an in service life of 3 years from when first put into use.

☐ **Measure and monitor airborne contaminants in the work area.**
Measure and monitor airborne contaminant levels in the work area in accordance with applicable requirements. Make sure work area is well ventilated.

☐ **If you have any questions, contact GVS-RPB.**

- Call the Customer Service Department at:
  Tel: 1-866-494-4599
  Email: sales@gvs.com
  Web: gvs-rpb.com

PRODUCT USER SAFETY INSTRUCTIONS

BEFORE INITIAL USE - BE TRAINED AND MEDICALLY QUALIFIED

Do not use this respirator until you have read this manual and the PX5 PAPR or the flow control device Instruction Manual (additional copies available at gvs-rpb.com) and been trained in the respirator's use, maintenance, and limitations by a qualified individual (appointed by your employer) who is knowledgable about the GVS-RPB Z-Link Respirator.

Do not wear this respirator until you have passed a medical evaluation using a medical questionnaire or an initial medical examination by a qualified physician or other licensed health care professional (PLHCP).

Allergens: No known common allergens are used in this product.

Some materials could cause an allergic reaction in susceptible individuals. If you have a known

allergy or develop irritation, inform your employer. Irritation may occur from lack of cleaning. Following all cleaning and care instructions provided in the instruction manuals for this and any other GVS-RPB products you are using.

MAKE SURE THE SYSTEM IS READY FOR USE

Make sure you have a complete system. Verify that you have all required components for the Z-Link to serve as a complete approved respirator:

- Respirator Helmet Assembly (Z-Link)
- Breathing Tube Assembly
- Flow Control Device (PX5, Constant Flow Valve or C40 Climate Control Device)
- Breathing Air Line (Supplied Air)

See Respirator Component Diagram (page 7-8). The GVS-RPB Z-LINK is only approved to be used with the GVS-RPB PX5 PAPR, GVS-RPB Constant Flow Valve, or the GVS-RPB C40 Climate Control Device. Use only authentic GVS-RPB brand parts and components that are part of the approved respirator assembly. Using incomplete or inappropriate equipment, including the use of counterfeit or non-GVS-RPB parts, can result in inadequate protection and will void the approval of the entire respirator. Do not modify or alter any part of this product.

Inspect all components daily for signs of damage or wear and tear that may reduce the level of protection originally provided. Remove any damaged component or product, including any helmet or visor that has been subject to impact, from service until repaired or replaced. Scratched or damaged safety lenses or other components should be replaced with genuine GVS-RPB brand replacement parts. When safety and impact lenses are replaced, make sure to remove any additional protective film from both sides of the lens. If the film is left in place, it could affect the optical clarity of the lens and cause eye strain. Inspect the inside of the respirator for respirable dust or other foreign objects. Keep the inside of the respirator clean at all times.

- Z-LINK has a shelf life of 5 years from the date of manufacture.
- Z-LINK has an in service life of 3 years from when first put into use.

Make sure that the helmet is correctly assembled in the configuration that suits your application. Never use the respirator without all lenses in place. This includes the Safety Lens and for the Z-Link+ this includes the Impact Lens, the ADF, and the rear ADF Lens. These lenses, when installed properly, are part of the respiratory seal to prevent toxic or hazardous gases, liquids or dust from entering the helmet. An incomplete or improperly installed lens system could provide inadequate impact and respiratory protection. *See Respirator Setup and Care - Standard Configuration (page 17) or Respirator Setup and Use - Z-Link+ Welding Configuration (page 28). See Donning (page 37) for fit information.*

VERIFY THAT YOU HAVE THE APPROPRIATE EQUIPMENT FOR YOUR ACTIVITY

Verify that the Z-Link provides appropriate protection for your activity. As applicable, check your workplace safety program, respiratory protection program, and standards and regulations for your activity or industry. (See PROTECTION PROVIDED AND LIMITATIONS, page 4.)

PRODUCT USER SAFETY INSTRUCTIONS CONTINUED

BEFORE DONNING THE Z-LINK:

Verify airborne contaminants are within recommended limits for respirator use:

- Determine the type and level of contamination. Verify that airborne contaminant concentrations do not exceed those allowed by applicable regulations and recommendations for powered air purifying respirators or supplied air respirators.

Filtering the breathing air:

- **PAPR:** Once the contamination level has been confirmed, determine the correct filter cartridge to be used for the application, to make sure that you are sufficiently protected. Follow the PX5 PAPR PAPR Instruction Manual.
- **SAR:** Once the contamination levels have been confirmed, check to make sure the airline filter is working correctly. Follow the Radex Airline Filter Instruction Manual.

Make sure the area is ventilated and monitored:

- Make sure that the area is well ventilated and that regular air samples are taken to confirm the atmosphere stays within the levels recommended by governing bodies. For Supplied Air, it is recommended to use a GX4 Gas Monitor. Follow the GX4 Gas Monitor Instruction Manual.

If you have any questions, ask your employer.

DO NOT ENTER THE WORK AREA if any of the following conditions exist:

- Atmosphere is immediately dangerous to life or health.
- You cannot escape without the aid of the respirator.
- Atmosphere contains less than 21% ±1% oxygen.
- Contaminants are in excess of regulations or recommendations.
- Contaminants or contaminant concentrations are unknown.
- Work area is poorly ventilated.
- The work area is a confined space (unless proper measures are taken for confined spaces).
- The temperature is outside the range of -30°C to +50°C (-22°F to 122°F).
- Used with systems including electrical parts, PX5, Vision-Link, 16-922 Comms-Link, 09-913 PTT, or 18-534 SENA® do not use when a flammable or explosive atmosphere is present.

LEAVE THE WORK AREA IMMEDIATELY IF:

- Any product component becomes damaged.
- Vision is impaired.
- Airflow stops or slows down, or alarm sounds. Do not use Powered Air Purifying Respirators if airflow is less than 180 lpm (6.4 cfm) for PX5.
- Breathing becomes difficult.
- You become dizzy, nauseous, too hot, too cold, or ill.
- Your eyes, nose, or skin become irritated.
- The work area is a confined space (unless proper measures are taken for confined spaces).
- You taste, smell, or see contaminants inside the helmet.
- You have any other reason to suspect that the respirator is not providing adequate protection.

PRODUCT CARE

Never place the helmet on hot surfaces. Do not apply paints, solvents, adhesives or self-adhesive labels except as instructed by GVS-RPB. This product may be adversely affected by certain chemicals.

See the "Respirator Setup and Care" section for more specific cleaning instructions.

INSTRUCTIONS FOR SPECIFIC USES OR ENVIRONMENTS

Welding

See Operator Setup and Use - Z-Link+ Welding Configuration (page 28) and ADF Operation (page 33) for important safety-related use and care information. Check the prescribed shade level for your welding application and adjust your auto-darkening filter accordingly (see table with recommended shade levels, page 36). Never place the auto-darkening welding filter (ADF) on hot surfaces. Do not expose the ADF to liquids and protect it from dirt. See ADF storage, maintenance, and cleaning information (page 34). Make sure the helmet completely blocks any accidental light. Make sure light can only enter the front of the helmet through the viewing area of the auto-darkening welding filter.

Welding and Grinding

For welding and grinding applications that produce sparks, be sure to use the FR (Fire Retardant) specific model of the PX5 with the FR belt and spark arrestor in place, see the PX5 Instruction Manual. Use a GVS-RPB Zytec® chin seal, face seal or shoulder cape for protection from sparks, debris, and light flashes. Make sure all skin, such as the neck, is covered to prevent UV radiation and burns.

Confined Spaces

If this respirator is used in confined spaces, ensure the area is well ventilated and that all contaminant concentrations are below those recommended for this respirator. Follow all procedures for confined space entry, operation, and exit as defined in applicable regulations and standards.

Welding in Confined Spaces

Welding in a confined space can present an atmospheric hazard due to the generation of contaminants and displacement of oxygen. A pressure-demand SCBA or a multifunctional pressure-demand supplied-air respirator with self-contained air supply shall be used during welding in confined spaces when welding can reduce the ambient oxygen level and supplemental ventilation and atmospheric monitoring are not provided.

⚠ WARNING **Do not use the Z-Link for welding without the Auto Darkening Protection Filter in place. Do not weld with only the grinding lens. Improper use may cause blindness or other permanent eye damage.**

BREATHING AIR PRESSURE TABLE

S - SPECIAL OR CRITICAL USERS INSTRUCTIONS - SAR *TABLE 1.3*

This table lists Air pressure ranges needed to provide the GVS-RPB Z-Link with the volume of air that falls within the required range of 170 - 425 slpm (6 -15 cfm) according to GOVERNMENT REGULATIONS. Maximum working pressure of the compressed air supply tube is 20.7 BAR.

1. AIR SOURCE	2. AIR SUPPLY HOSE	3. FLOW CONTROL DEVICE USED WITH 04-835 BREATHING TUBE ASSEMBLY	4. SUPPLY HOSE LENGTH (METRES)	5. MAX NUMBER OF SECTIONS	6. PRESSURE RANGE (BAR)
PORTABLE OR STATIONARY COMPRESSOR	04-322-25 (7.5M) 04-322-50 (15M) 04-322-100 30M)	03-102 CONSTANT FLOW VALVE ASSEMBLY	7.5 15 30 45 60 75 90	1 1 1 2 2 3 3	0.65 - 0.72 0.76 - 0.90 0.97 - 1.24 1.17 - 1.52 1.45 - 1.72 1.70 - 2.00 1.90 - 2.17
		03-502 C40 CLIMATE CONTROL DEVICE ASSEMBLY	7.5 15 30 45 60 75 90	1 1 1 2 2 3 3	3.79 - 4.48 4.14 - 4.83 4.48 - 5.52 4.83 - 5.52 5.17 - 5.86 5.52 - 6.21 6.21 - 6.55

⚠ WARNING Make sure you understand the Breathing Air Pressure table before using this respirator.

1. Use the correct air source. Do not use an ambient air pump, as it does not supply enough pressure (column 1).
2. Confirm the part number of the air supply hose (column 2) and the flow control device (column 3) you are using.
3. Check your GVS-RPB Safety Air Supply Hose is within the correct length (column 4) and the correct number of hose sections (column 5).
4. Set the air pressure at the point of attachment within the range specified (column 6).

Make sure air is flowing through your respirator when setting the air pressure.

Failure to supply the minimum required air pressure at the point of attachment for the length of air supply hose will decrease the level of protection provided. Check that the capacity of the air supply systems can provide sufficient air to all users, with a maximum of 5 users connected simultaneously per air supply unit. In addition, could result in contaminants being inhaled as the pressure in the helmet may become negative due to peak inhalation flow when working at very high work rates. Low airflow will decrease the level of protection provided.

ALWAYS WEAR EAR PLUGS WHEN WEARING THIS APPARATUS.

⚠ WARNING **The Z-LINK Supplied Air Respirator must be supplied with respirable air meeting the requirements of EN 12021 (AS/NZS 1715) or higher quality and meets other governing body requirements. The moisture content of the breathable air should controlled within the limits in accordance with EN 12021, to avoid the air freezing the apparatus. Do not use oxygen enriched air.**

SETUP AND CARE - STANDARD CONFIGURATION

BREATHING TUBE AND ADAPTER

FIGURE 2.1

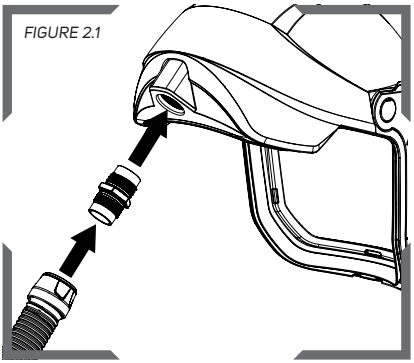

Insert the breathing tube adapter into the inlet of the Z-Link by threading it in until tight. A wrench may be required. Be careful not to over tighten and crack the inlet area of the Z-Link. Screw the breathing tube onto the adaptor once it is installed on the Z-Link.

FIGURE 2.2

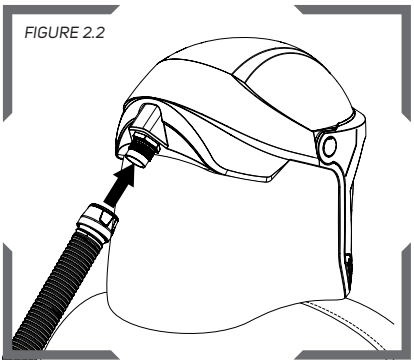

Place the threaded end of the breathing tube onto the breathing tube adapter on the back of the Z-Link and screw the breathing tube in completely without over tightening.

SETUP AND CARE - STANDARD CONFIGURATION CONTINUED

POWERED AIR

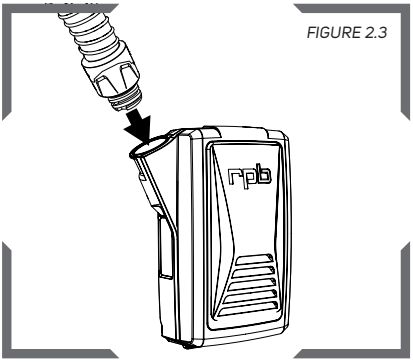

FIGURE 2.3

For PAPR, insert the bayonet end of the breathing tube into the outlet of the PAPR and twist it in until it is secure.

For Supplied Air, screw on the breathing to the flow control device.

FOR USE WITH GVS-RPB PX5 - SEE THE PAPR USER MANUAL

When the Z-Link Respirator is being used in conjunction with the GVS-RPB PX5 PAPR, please refer to the PX5 PAPR User Instruction Manual for set up and use of the assembly.

Note: The GVS-RPB PX5 is a Powered Air Purifying Respirator, therefore care must be taken when selecting the correct filter for the application the respirator will be used in.

SUPPLIED AIR

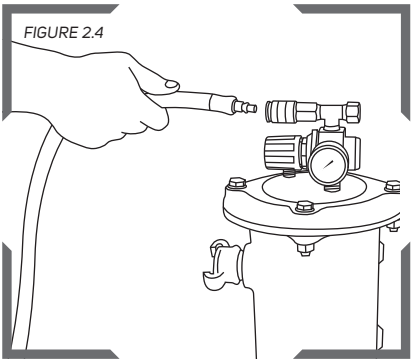

FIGURE 2.4

Connect the EN 14594, AS/NZS 1716 approved Z-Link Air Supply Hose to a breathing air source supplying EN 12021 or better quality air. Connect the respirator quick disconnect fitting onto the Air Supply Hose.

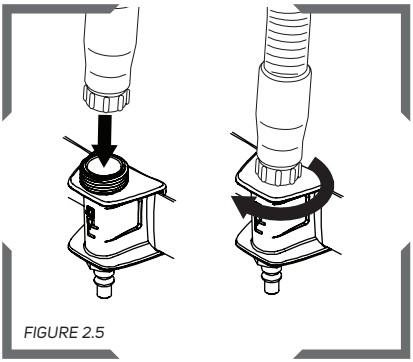

FIGURE 2.5

Connect the Air Supply Hose to the flow control device.

Note: Check the hose connections for any air leaks and tighten if necessary - replace any worn parts.

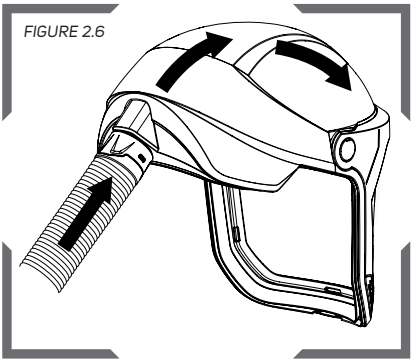

FIGURE 2.6

With air flowing through the respirator adjust the air pressure at the point of attachment to the recommended pressure as specified in the Breathing Air Pressure Table (page 15).

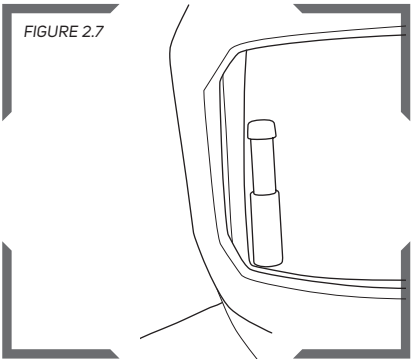

FIGURE 2.7

Airflow in the apparatus must be above 170lpm and the yellow indicator is not visible when the flow drops below this rate. DO NOT use the apparatus when the indicator is not showing.

The Indicator can be positioned high or low on the jaw so it is clearly visible.

LENS REPLACEMENT

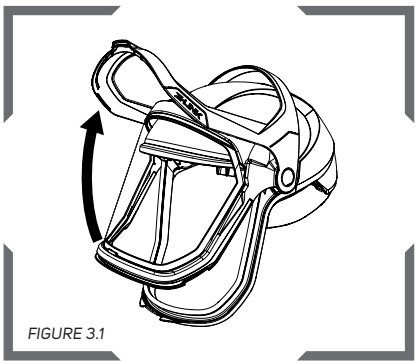

FIGURE 3.1

To replace the Safety Lens, lift up the visor, unlatch the inner visor from the outer visor and open them apart.

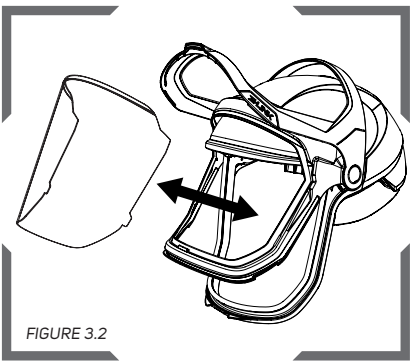

FIGURE 3.2

Pull out the lens and insert a new Safety Lens making sure the tabs of the lens are in all four attachment points on the visor and the lens is inside of the guide along the bottom front edge of the visor.

SETUP AND CARE - STANDARD CONFIGURATION CONTINUED

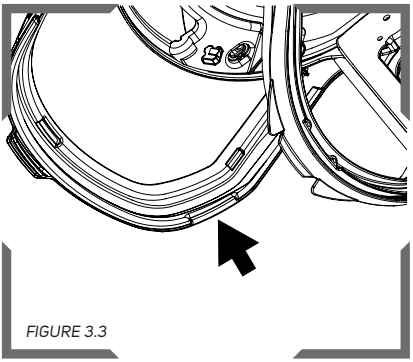

FIGURE 3.3

Close the outer visor over inner visor and lens, making sure the latches at the corners are secure.

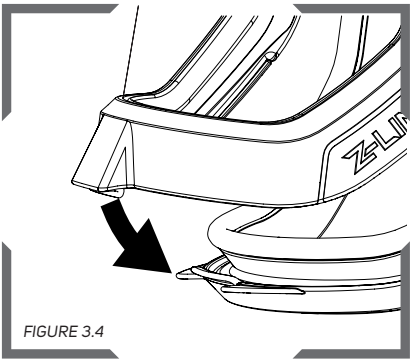

FIGURE 3.4

Close the visor making sure it **LATCHES SECURELY** to the front of the jaw. Listen for the visor latching over the tab on the front of the jaw.

VISOR REPLACEMENT

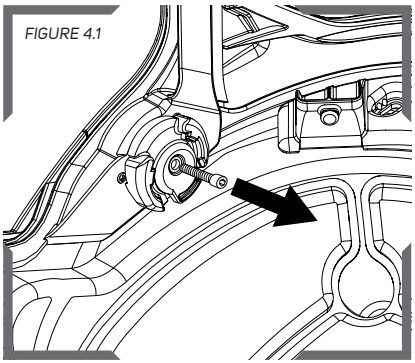

FIGURE 4.1

To replace the Visor, from inside of the helmet, unscrew the center screw from the visor pivot point on each side.

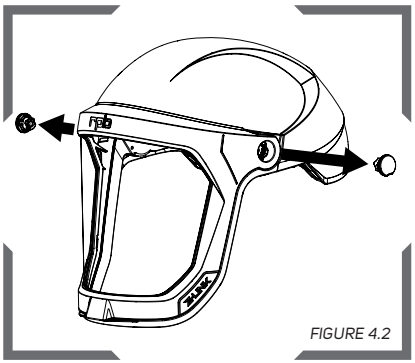

FIGURE 4.2

Remove the cap, pivot pin, and spring from the visor on both sides. Pull the visor out of the pivot points and remove from the helmet.

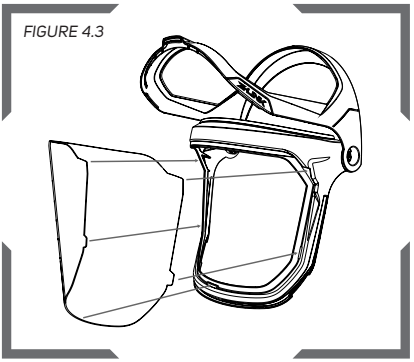

FIGURE 4.3

To attach the Visor, insert the selected Safety Lens into the inner visor and secure the inner and outer visors together.

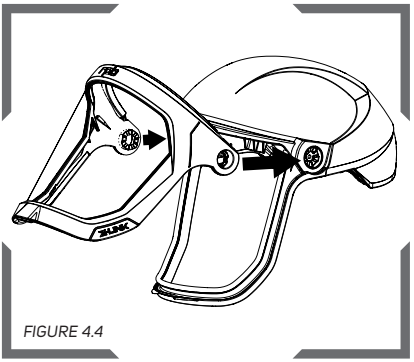

FIGURE 4.4

Place the visor onto the helmet pivot points, insert the pivot pins and springs, then screw in the attachment screws from the inside of the helmet until tight.

VISOR SEAL REPLACEMENT

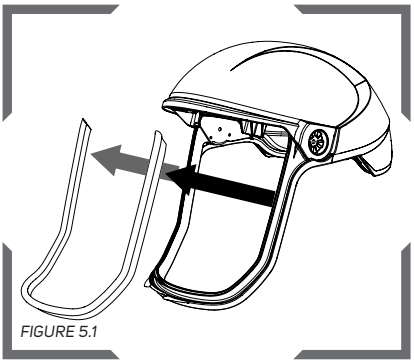

FIGURE 5.1

The visor seal can be replaced by pulling it out of the track around the visor opening.

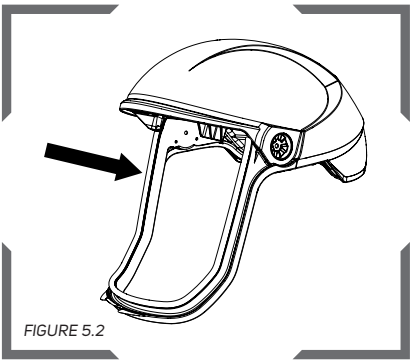

FIGURE 5.2

Starting from on of the top corners, insert the new visor seal by pressing the edge into the track all of the way around the visor opening.

SETUP AND CARE - STANDARD CONFIGURATION CONTINUED

HEAD HARNESS ADJUSTMENT

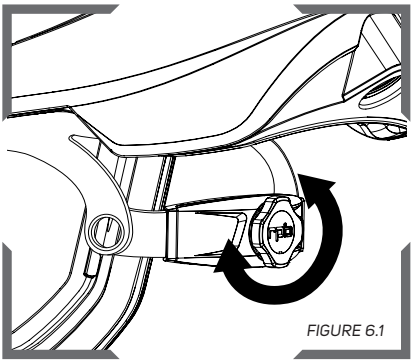

FIGURE 6.1

The head harness can be tightened or loosened using the ratchet knob on the back of the headband.

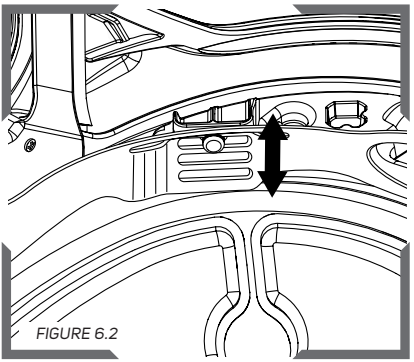

FIGURE 6.2

The height of the head harness can be adjusted at the four attachment points by switching which of the three slots is used.

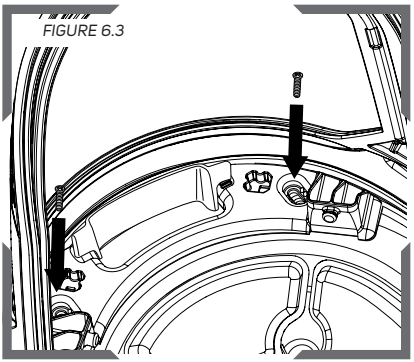

FIGURE 6.3

The position of the head harness can be adjusted by loosening the screws that hold the front bracket and sliding it forward or backwards into the desired slot. Once in position, tighten the screws.

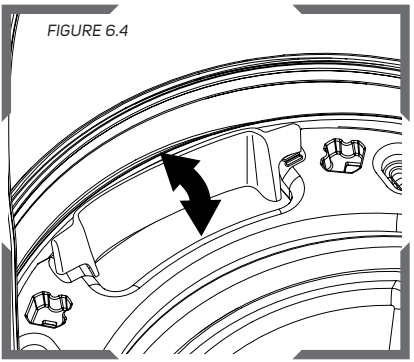

FIGURE 6.4

Airflow can be directed by positioning the air flow director so that the air flows more towards the visor or towards the face.

SIDE PADDING SYSTEM

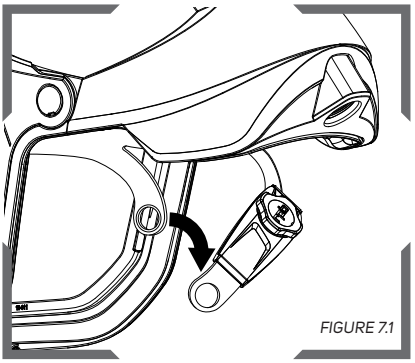

FIGURE 7.1

Detach the head harness ratchet at the pivot points.

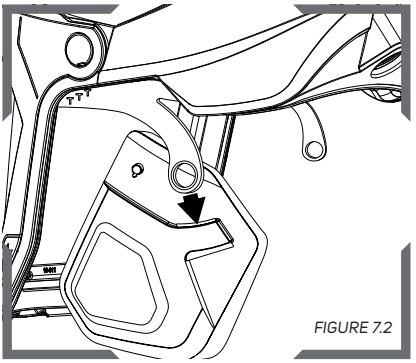

FIGURE 7.2

Slide the ends of the head harness into the slots on the side pad covers.

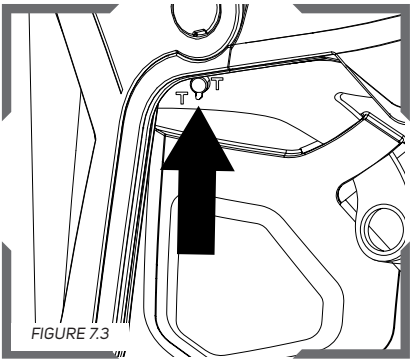

FIGURE 7.3

Slide the tab on the side pad covers into one of the three T-shaped slots in the head harness depending on the desired height of the side pads. Reinsert the ratchet pivot points.

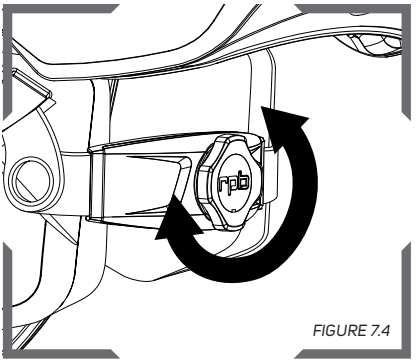

FIGURE 7.4

While wearing the Z-Link, tighten the ratchet adjustment until the helmet and side pads sit comfortably on the head and ears.

SETUP AND CARE - STANDARD CONFIGURATION CONTINUED

SIDE PADDING SYSTEM CLEANING AND DISINFECTING

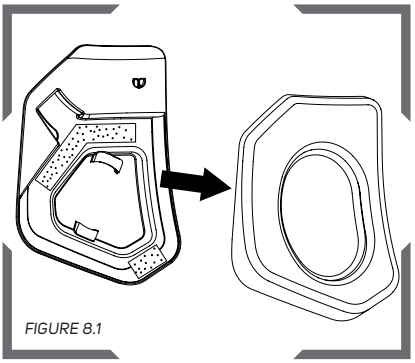

FIGURE 8.1

Remove the side pads from the covers that are attached with hook and loop.

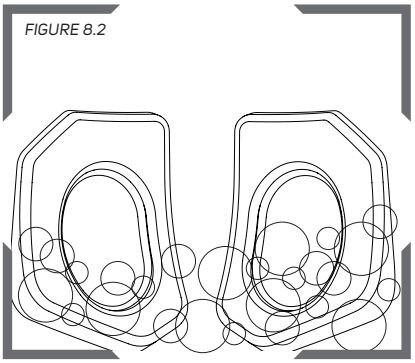

FIGURE 8.2

Wash the pads with mild detergent. Once dry, reattach them to the side pad covers.

BROW PAD REPLACEMENT, CLEANING AND DISINFECTING

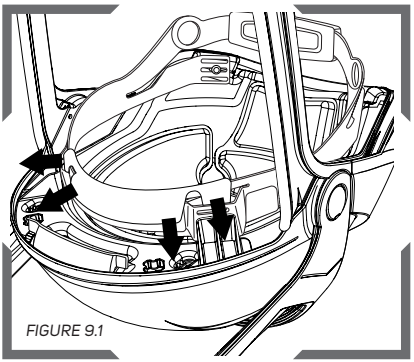

FIGURE 9.1

To remove the brow pad, undo the hook and loop tabs and take it off of the head harness. Wash it with mild detergent or replace it with a new one.

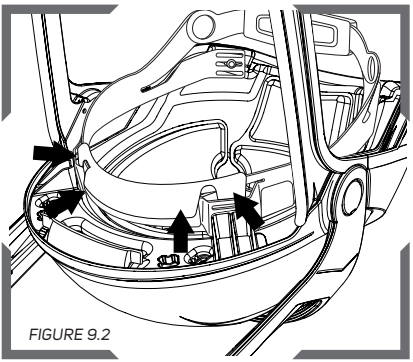

FIGURE 9.2

Replace the brow pad by wrapping the brow pad over the head harness with the flat side facing inwards. Stretch the pad around the head harness and secure the hook and loop tabs.

FACE SEAL/CAPE INSTALLATION/REPLACEMENT

FIGURE 10.1

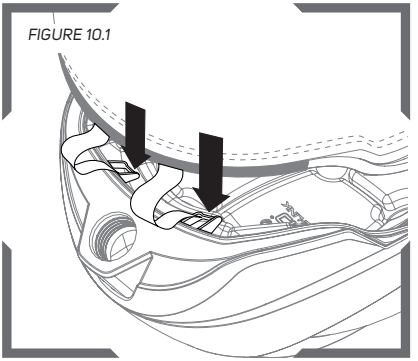

Start by securing the hook and loop strips through the attachment points in the back of the helmet. These should be tight enough so that when the rear seal is pressed in, the fabric is bunched up a little.

FIGURE 10.2

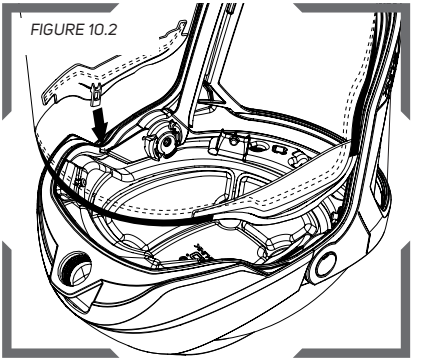

Next attach one of the side clips into the helmet. Make sure the clip goes over the notch on the helmet and the clip edge goes into the track around the edge of the helmet.

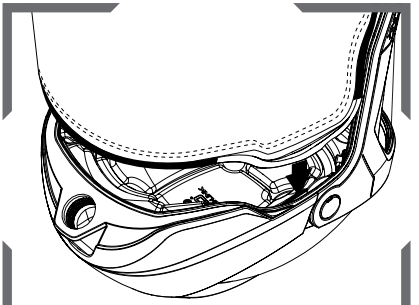

FIGURE 10.3

Press the rubber seal into the track that goes around the back of the helmet, making sure the cape/face seal is completely attached all of the way around the back and attach the other side clip. When the back of the cape is tugged on, the strips should keep it from coming out of the track.

FIGURE 10.4

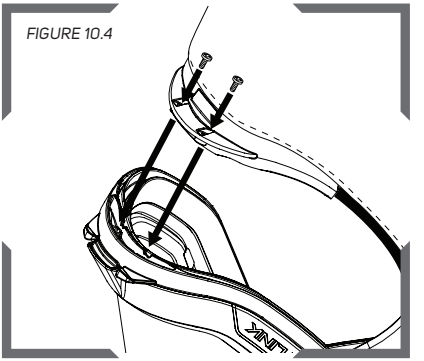

Press the rubber seal in up both sides of the jaw. Insert the front clip into the track around the front of the jaw. Make sure the holes are aligned and insert and tighten the screws to secure the front of the cape.

If your face seal or shoulder cape has a rubber seal on the back with a hole in it, push the ratchet knob through the hole. This will allow you to easily adjust the head harness ratchet.

SETUP AND CARE - STANDARD CONFIGURATION CONTINUED

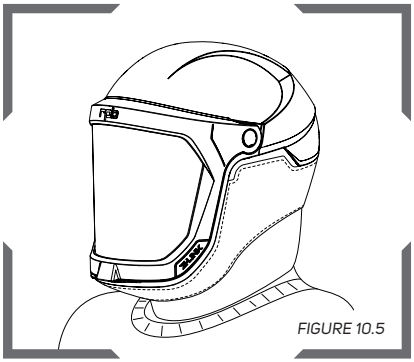

FIGURE 10.5

When using a face seal, make sure the neck seal is in contact with the neck all of the way around by tightening the cord.

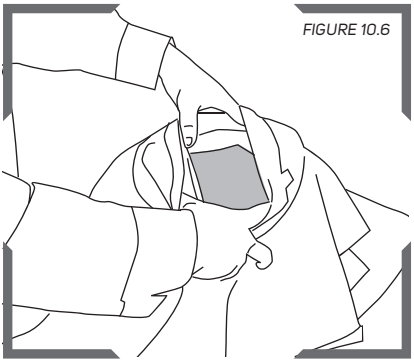

FIGURE 10.6

When using a cape, adjust the elastic cord in the inner collar to ensure a snug fit around the user's neck and pull the fabric down all of the way around over the shoulders so that it isn't bunched up.

CHIN SEAL INSTALLATION/REPLACEMENT

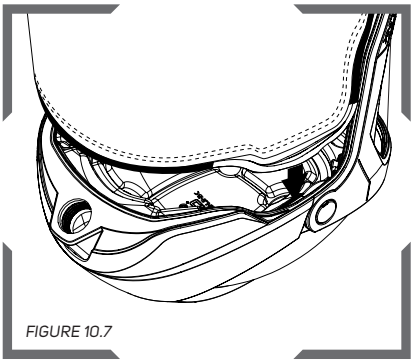

FIGURE 10.7

To install the chin seal, insert one side clip like in step 10.2. Then press in the seal around the back of the helmet to the other side clip. Insert the other side clip.

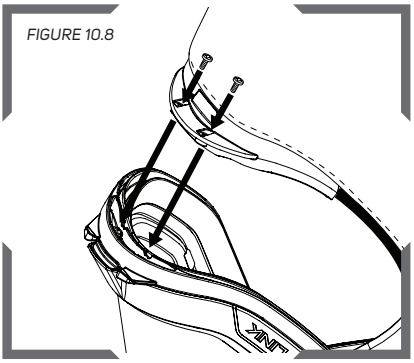

FIGURE 10.8

Press the rubber seal in up both sides of the jaw. Insert the front clip into the track around the front of the jaw. Make sure the holes are aligned and insert and tighten the screws to secure the front of the cape.

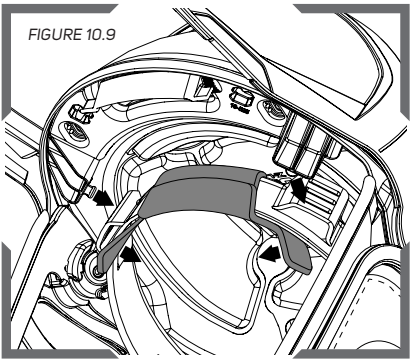

Detach the 2 front head harness clips. Undo the 2 side attachment tabs of the brow pad.

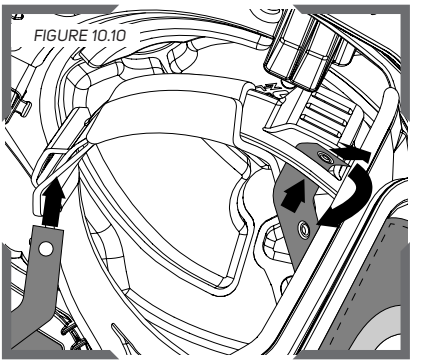

Insert the inner attachment tabs of the chin seal through the slots in the front of the head harness. Secure the snaps. Reattach the brow pad tabs. Reattach the head harness to the front mounting points.

REPLACEMENT, CLEANING AND DISINFECTING INSIDE THE HELMET

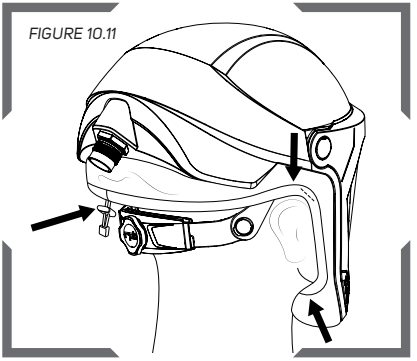

When donning a Z-Link with the chin seal, after putting it on your head, tighten the draw cord using the pull tab on the back. Make sure the seal is against the skin all of the way around. Make sure the seal goes above the ears and around the back of the head, above the ratchet.

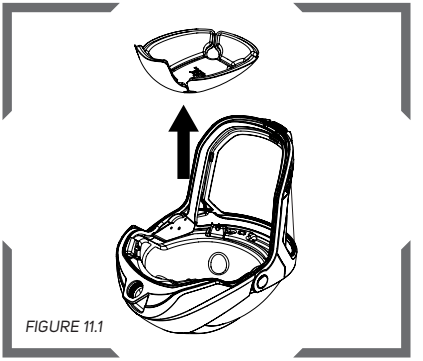

The comfort pad is attached to the inside of the Impact Liner with hook and loop. Pull the comfort pad out of the helmet. The comfort pad can be washed with mild detergent or replaced.

SETUP AND CARE - STANDARD CONFIGURATION CONTINUED

FIGURE 11.2

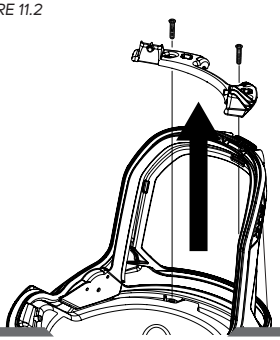

To remove the Impact Liner, remove the head harness bracket by removing the screws holding it in place.

FIGURE 11.3

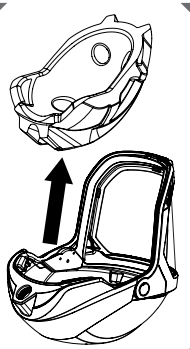

Rotate the Impact Liner out of the helmet shell. The inside of the shell can be washed with mild detergent or a cleaning wipe.

SETUP AND CARE - Z-LINK+

IMPACT LENS, ADF LENS AND REAR LENS REPLACEMENT

FIGURE 12.1

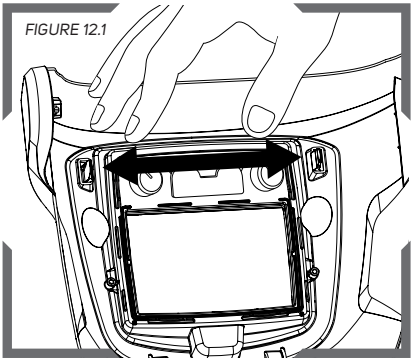

Push the tabs inside the weld visor apart to release the ADF Retainer.

FIGURE 12.2

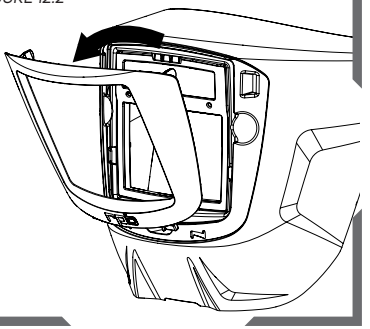

Remove the green ADF Retainer.

FIGURE 12.3

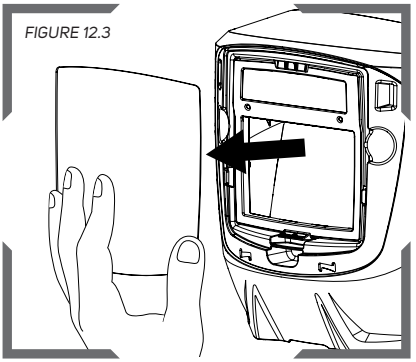

Remove the Impact Lens by squeezing together the sides of the Impact Lens. If just replacing the Impact Lens, then place the new Impact Lens in and replace the green ADF Retainer.

FIGURE 12.4

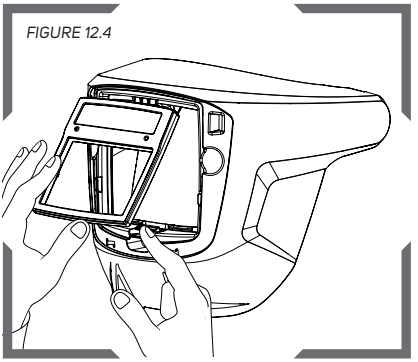

To remove the ADF, push down on the tab at the bottom of the ADF to release it and pull the ADF out.

CLEANING THE ADF

FIGURE 13.1

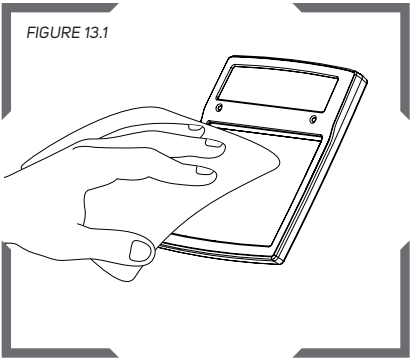

Once removed, the ADF can be cleaned with a soft tissue or a cloth soaked in mild detergent (or alcohol).

FIGURE 13.2

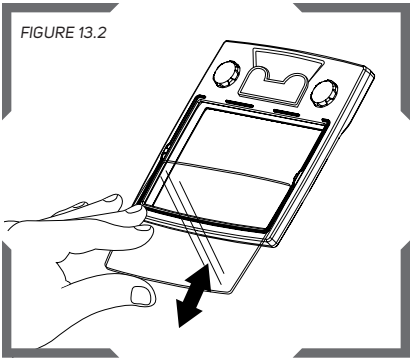

To replace the Rear ADF Lens, slide the lens out and replace it with a new one.

SETUP AND CARE - Z-LINK+ CONTINUED

MAGNIFYING LENS

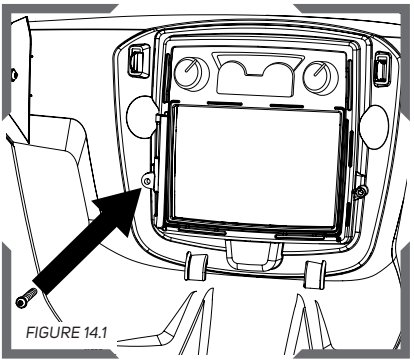

FIGURE 14.1

With the screws supplied, screw the left lens bracket into place by tightening the screws firmly without over tightening. Then screw in the right bracket.

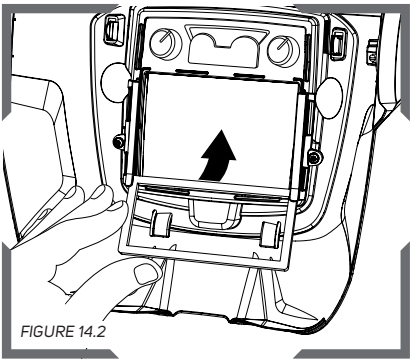

FIGURE 14.2

To install the magnifying lens for welding, slide the lens up into the brackets at an angle until it is securely in the brackets.

INSTALL/REPLACE FIXED SHADE WELDING LENS

The fixed shade lens and frame can be used in place of the ADF for welding and other applications requiring light filtering. Choose an appropriate shade lens depending on the application. Install the lens frame with a lens installed into the Z-Link+ the same way as installing an ADF. Do not use the Z-Link+ without and ADF or a fixed shade lens in place.

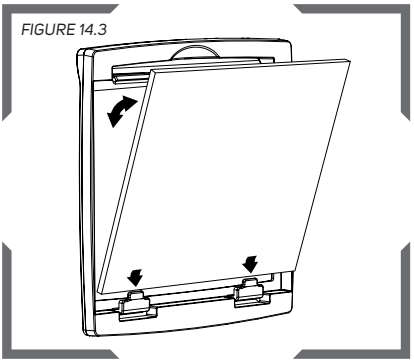

FIGURE 14.3

To install a fixed shade lens into the frame, slide the lens into the long tab at an angle from the back. Then rotate the lens down until it securely clips into the frame. To remove the lens, un-clip the bottom edge and slide out.

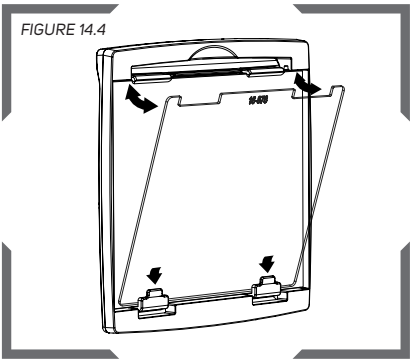

FIGURE 14.4

The inner protective lens can be placed into the frame after the fixed shade lens to help protect the inner surface when the weld visor is lifted up to grind welds, etc.

INSTALL/REMOVE WELDING VISOR

FIGURE 15.1

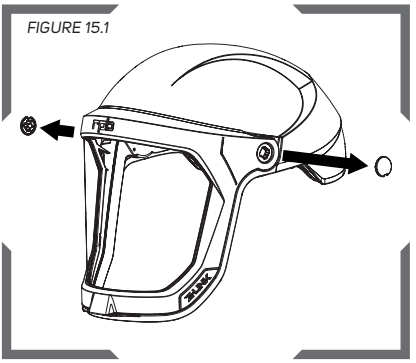

To install the Z-Link Welding Visor, remove the pivot pin caps on the Z-Link.

FIGURE 15.2

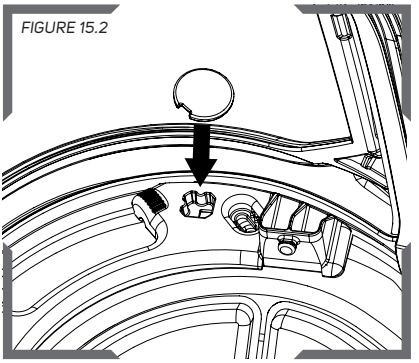

Insert the caps into the holding sockets on the Head Harness Bracket so they don't get lost while using the Welding Visor.

FIGURE 15.3

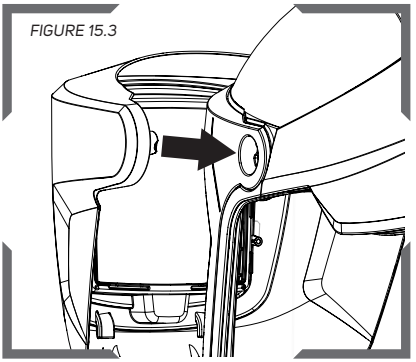

Line up the Welding Visor connection sockets with the Pivot Pins on the Z-Link and insert them into the Z-Link until they snap in securely. This can be done while wearing the Z-Link.

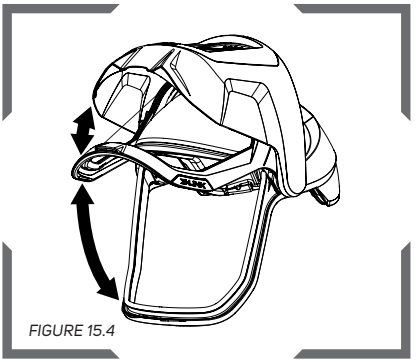

FIGURE 15.4

The Welding Visor can be rotated up independently of the Visor or together with the Visor.

SETUP AND CARE - Z-LINK+ CONTINUED

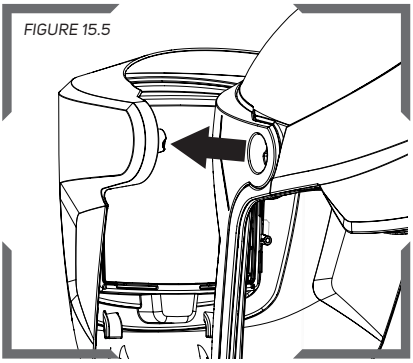
FIGURE 15.5

To remove the Welding Visor from the Z-Link, pull the sides of the Welding Visor out until the connection sockets snap out of the Pivot Pins in the Z-Link. This can also be done while wearing the Z-Link.

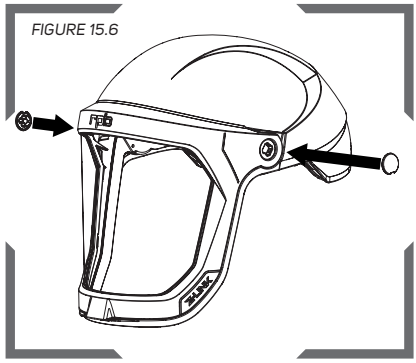
FIGURE 15.6

If the Welding Visor is not going to be used again for a while, the socket caps can be snapped back into the Pivot Pins to keep the area free of debris.

⚠ WARNING **Do Not use the Z-Link+ with a Gas Cartridge, as the combined weight of Visor and Earmuffs exceeds the weight limits.**

REPLACING THE WELDING VISOR FLIP-UP MECHANISM

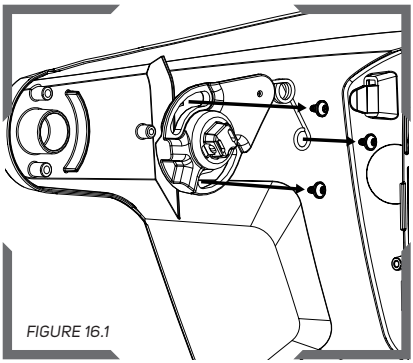
FIGURE 16.1

The flip-up mechanisms and springs can be replaced if needed. Using a small screw driver, remove the three screws that hold in the mechanism being careful to not strip the plastic they are threaded into.

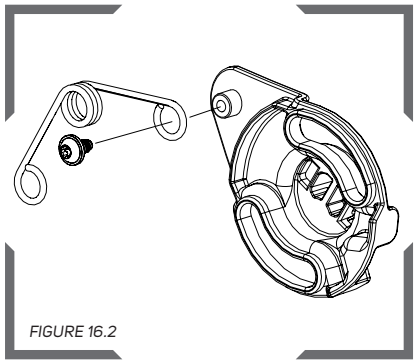
FIGURE 16.2

Position the spring onto the new flip up mechanism and secure it with the screw provided.

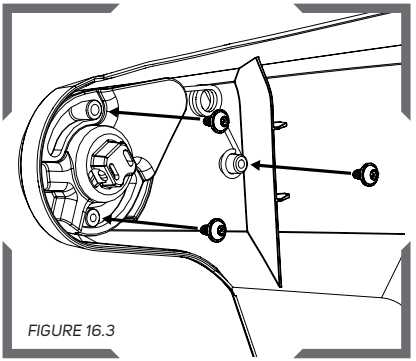

FIGURE 16.3

Carefully align the replacement spring and the flip-up mechanism onto the pegs in the Welding Visor. Insert and screw in the 3 replacement screws to attach the spring and mechanism without over tightening.

INSTALL/REPLACE WELDING CAPE

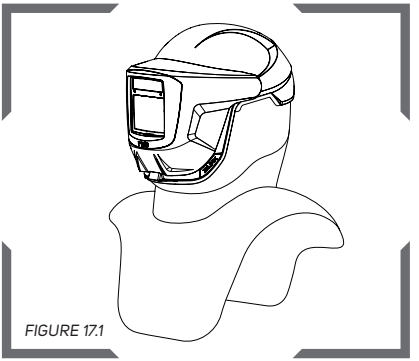

FIGURE 17.1

When welding, be sure to install a approved GVS-RPB welding cape for adequate protection from sparks, debris, and light flashes. Follow the cape installation instructions on page 18.

Protecting you for life's best moments.

AUTO-DARKENING WELDING PROTECTION FILTER

OPERATION

GVS-RPB auto-darkening welding filters operate on the basis of a liquid crystal light shutter that protects the welder's eyes against intense visible light emitted during the welding process. In combination with the permanent passive IR/UV filter, it protects against hazardous infrared (IR) and ultraviolet (UV) light. The protection against harmful radiation is present regardless of the shade level or potential malfunction of the filter, beyond the darkest shade number marked on each specific model.

GVS-RPB auto-darkening welding filters are manufactured according to EN 379 requirements and are CE certified. They are not intended to be used as a protection against impacts, flying particles, molten metals, corrosive liquids or hazardous gases.

Replace potentially malfunctioned or damaged auto-darkening welding filters (check that the auto-darkening filter turns dark if you strike the welding arc).

USAGE

An auto-darkening welding filter built into a Respirator is considered to be Personal Protection Equipment (PPE) protecting the eyes, face, ears and neck against direct and indirect hazardous light of the welding arc. In case that you have only bought a filter without the helmet, you need to select the appropriate helmet designed to be used in combination with an auto-darkening welding protection filter. It has to allow the filter, including the internal and external protection screens, to be adequately mounted into the helmet. There should be no tension on the ADF Lens caused by the mounting frame or mounting system, as it could cause severe damage to the filter. Make sure that solar cells and photo-sensors are not covered by any part of the helmet, as this could prevent the proper operation of the filter. If any of these conditions occur, the filter may not be suitable for use.

FIELD OF APPLICATION

GVS-RPB Auto darkening filters are suitable for all types of electro-welding: covered electrodes, MIG/MAG, TIG/WIG, plasma welding, and cutting, except for gas welding and laser welding.

FUNCTIONS

GVS-RPB filters are supplied ready for use. Check the degree of required protection for specific welding procedure and select the recommended shade, light sensitivity as well as opening time delay.

SHADE ADJUSTMENT

Our model enables shade adjustment range from 9 to 13. It can be adjusted by the knob »Shade« which is located on the filter.

ADJUSTMENT OF SENSITIVITY

Most welding applications can be performed with welding light sensitivity set to maximum. The maximum sensitivity level is appropriate for low welding current work, TIG, or special applications. The welding light sensitivity has to be reduced only in some specific surrounding lighting conditions in order to avoid unwanted triggering. As a simple rule for optimum performance, it is recommended to set sensitivity to the maximum at the beginning and then gradually reduce it, until the filter reacts only to the welding light flashes

and without annoying spurious triggering due to ambient light conditions (direct sun, intensive artificial light, neighboring welder's arcs etc.)

OPENING TIME DELAY ADJUSTMENT:

The opening time delay can be adjusted from 0.15 to 1.0 seconds. It is recommended to use a shorter delay with spot welding applications and a longer delay with applications using higher currents and longer welding intervals. Longer delay can also be used for low current TIG welding in order to prevent the filter opening when the light path to the sensors is temporarily obstructed by a hand, torch, etc.

STORAGE

When not in use the Auto Darkening Filter should be stored in a dry place within the temperature range of -20°C (-4°F) to 70°C (157°F). Prolonged exposure to temperatures above 45°C (113°F) may decrease the battery lifetime of the auto-darkening welding filter.

It is recommended to keep the solar cells of the auto-darkening welding filter in the dark or not exposed to light during storage in order to maintain power down mode. This can be achieved by simply placing the filter face down on a storage shelf.

MAINTENANCE AND CLEANING

It is always necessary to keep the solar cells and the light sensors of the auto-darkening welding filter free of dust and spatters: cleaning can be done with a soft tissue or a cloth soaked in mild detergent (or alcohol).

Never use aggressive solvents such as acetone. GVS-RPB filters should always be protected from both sides by protection screens, which should also be only cleaned with a soft tissue or cloth. If protection screens are in any way damaged, they must be immediately replaced.

PRODUCT CARE

Never place the ADF Lens or helmet on hot surfaces. Do not apply paints, solvents, adhesives or self-adhesive labels except as instructed by GVS-RPB. This product may be adversely affected by certain chemicals. Do not expose the ADF to liquids and protect it from dirt. Make sure the helmet completely blocks any accidental light. Make sure light can only enter the front of the helmet through the viewing area of the auto-darkening welding filter.

See the "Setup and Care" section for more specific cleaning instructions.

WARRANTY

The warranty period of GVS-RPB Z-Link ADF is three years. Failure to follow these instructions may invalidate the warranty. GVS-RPB does not accept responsibility for any issues, which may arise from applications other than welding.

MARKINGS

The marking on the ADF indicates:

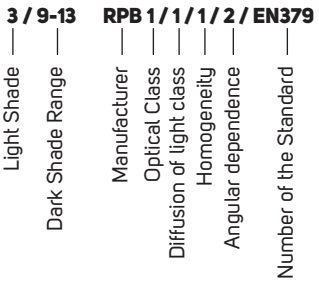

AUTO-DARKENING WELDING PROTECTION FILTER
CONTINUED

SETTINGS

- Shade level: The shade level can be selected between 9 and 13 by rotating the shade level knob.
- Sensitivity: With the sensitivity knob the light sensitivity is adjusted according to the welding arc and the ambient light. The middle position corresponds to the recommended sensitivity setting in a standard situation.
- Opening delay. The opening delay switch, behind the battery cover, allows the opening delay to be set from dark to light. It is adjustable between 0.15 or 1.0 second. The "Twilight" position corresponds to the recommended delay in a standard situation.

CHANGE THE BATTERIES

The automatic welding filter has replaceable lithium button cell batteries, type CR2032. The batteries must be replaced when the LED on the cartridge flashes.

1. Carefully remove battery cover.
2. Remove batteries and dispose of in accordance with the national regulations for special waste.
3. Use type CR2032 batteries as depicted.
4. Carefully remount battery cover.

If the automatic welding filter does not darken when the welding arc is ignited, please check battery polarity. To check whether the batteries still have sufficient power, hold the shade cartridge against a bright lamp. If the LED flashes, the batteries are empty and must be replaced immediately. If the shade cartridge does not operate correctly in spite of correct battery replacement, it must be declared unusable and must be replaced.

SLEEP MODE

The automatic welding filter has an automatic switch-off function, which increases the service life. If no light falls on the solar cells for a period of approx. 15 minutes, the cartridge automatically switches off. To reactivate the automatic welding filter, the solar cells must be briefly exposed to daylight. If the cartridge cannot be reactivated or does not darken when the welding arc is ignited, it must be regarded as non-functional and replaced.

EXPECTED LIFETIME

The automatic welding filter has no expiration date. The product can be used as long as no visible or invisible damage or functional problems occur.

TROUBLESHOOTING

Shade automatic welding filter does not darken:

- Adjust sensitivity
- Clean sensors and clean or change the impact lens of the helmet shell
- Check flow of light to the sensors
- Replace batteries

ADF flickers:

- Adjust sensitivity
- Replace batteries

Poor vision:

- Clean or change the impact lens of the helmet shell and automatic welding filter
- Adapt shade level to welding procedure
- Increase amount of ambient light

RECOMMENDED SHADE LEVELS FOR VARIOUS WELDING APPLICATIONS *FIGURE 18.1*

Welding Process	Current Amperes																				
	1.5	6	10	15	30	40	60	70	100	125	150	175	200	225	250	300	350	400	450	500	600
MMA	8							9	10		11		12			13		14*			
MAG	8							9	10		11			12			13				
TIG		8		9				10		11			12			13					
MIG heavy metals								9		10		11			12		13		14*		
MIG light metals Stainless, Alum.										10		11		12		13		14*			
Plasma Cutting									9	10	11		12			13					
Micro Plasma Welding		4		5		6		7	8	9		10		11		12					

**Shade 14 not achieved with this ADF.*

■ According to the perception of the welder it is possible to use the next higher or lower shade-number.

DESCRIPTION OF RPB FILTER FEATURES *FIGURE 18.2*

1. Solar Cells
2. Photo-sensors (Photo diodes)
3. Filter housing
4. Liquid crystal shutter viewing area
5. Shade adjustment
6. Sensitivity adjustment
7. Opening time delay adjustment

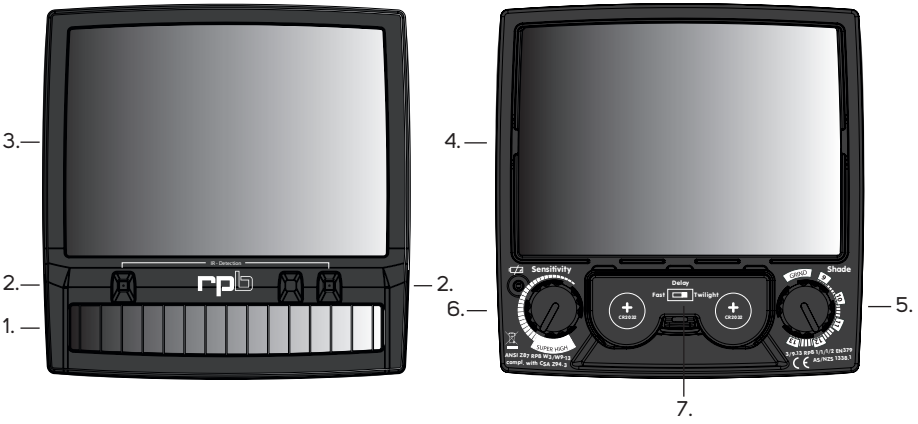

TECHNICAL DATA *FIGURE 18.3*

Model	RPB® ADF
Viewing Area	2.66 x 3.89 in. (67.6 x 98.8 mm)
ADF overall dimensions	4.49 x 4.57 x 0.47 in. (114 x 116.2 x 11.9 mm)
Weight	4.59oz (130g)
Open state shade	3 (Bright Mode)
Closed state shade	9-13 (Dark Mode)
Switching time from light to dark	0.1 ms (23°C / 73°F) 0.1 ms (55°C / 131°F)
Switching time from dark to light	0.15s / 1.0s
UV / IR protection	Maximum protection in light and dark modes
Operating temperature	23 °F – 131 °F (-5 °C – 55 °C)
Storage temperature	-4°F – 157°F (-20°C – 70°C)
Power Supply	Solar cells, 2 pcs. replaceable 3V LI batteries (CR2032)
Classification in accordance with EN379	Optical class = 1 Scattered light = 1 Homogeneity = 1 Viewing angle dependence = 2
Standard	EN379:2003+A1:2009
Certifications	CE, ANSI, compliance with CSA

DONNING AND DOFFING

⚠ WARNING **Donning procedure shall be carried out strictly in accordance with the instructions in this manual. Always check the interior of the respirator for contaminants before donning. Always don and doff the helmet while outside the work area, keeping the interior of the helmet clean and free of contaminants. Not doing these steps could expose you to hazardous materials, and contaminants that could impair the function of the respirator.**

DONNING YOUR HELMET

Once you have completed the set up, you are ready to fit your GVS-RPB Z-Link Respirator. Firstly check inside the helmet to ensure that it is free of dust, dirt or contaminants. Then open the bottom of the cape or face seal, with the air flowing from the air source, put the respirator onto your head. Tighten the head harness ratchet to fit, then pull the cape down or make sure the face seal is sealing around your face/neck. Make sure the visor is securely latched.

DONNING AND DOFFING CONTINUED

DOFFING YOUR HELMET

When you have finished working, keep the respirator on with air flowing into the helmet until you have left the contaminated area. Depending on the contaminants, it may be advisable to clean the exterior of the helmet and your work garments before removing the respirator. A workplace cleaning program may be necessary.

STORAGE

Before storing the respirator, clean the unit following the cleaning instructions in this instruction manual. Be sure it is clean, both inside and out. After use, store the respirator by hanging it up in a clean, dry place, away from the work area. If the Z-Link isn't going to be used for a longer period of time, it is recommended to store or transport it in a container or a bag. Store in a cool dry place between -10°C to +45°C (14°F to 113°F) <90%rh.

After use:

FIGURE 19.1

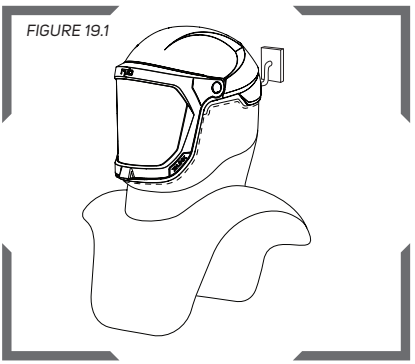

Long term storage or transport:

FIGURE 19.2

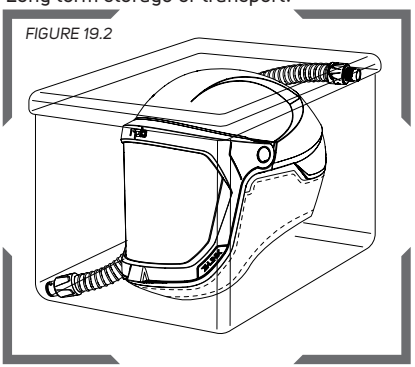

PX5 may need to be stored separately, refer to the PX5 Instruction manual for specific storage instructions.

PRODUCT CARE INSTRUCTIONS

It is recommended to establish a regular cleaning schedule for the padding and capes to ensure good hygiene.

- Capes, face seals and chin seals: Hand wash only with mild detergent and warm water. Hang to dry. Do not launder in a washing machine or dryer. If laundered in a washer or dryer, product life will be reduced and warranty voided.
- Padding: Hand wash only with mild detergent and warm water. Lay flat to dry.

The Z-Link is a loose fitting respirator, caution is required when used in high winds.

Make sure all components are dry before use. Inspect for wear and tear and replace if damaged or excessively worn.

Protecting you for life's best moments.

COMMS-LINK INSTRUCTIONS

SET UP

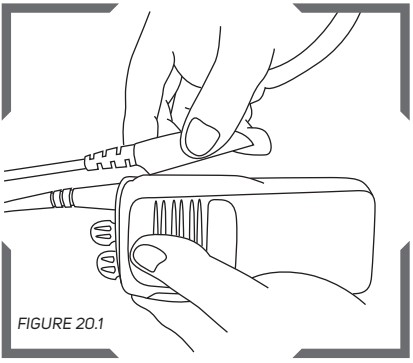

FIGURE 20.1

Connect the PTT Cable to the Hand Set depending on the type used.

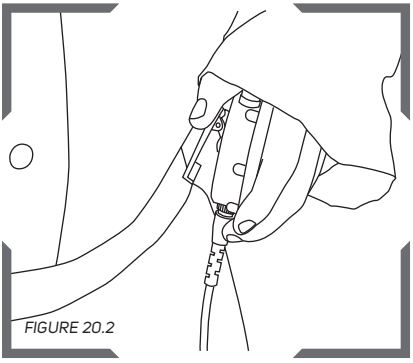

FIGURE 20.2

Attach the PTT to your belt so your elbow can activate the Button.

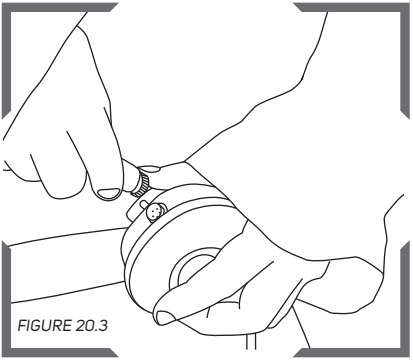

FIGURE 20.3

Connect the PTT cable to the head set cable and place the cable underneath the cape.

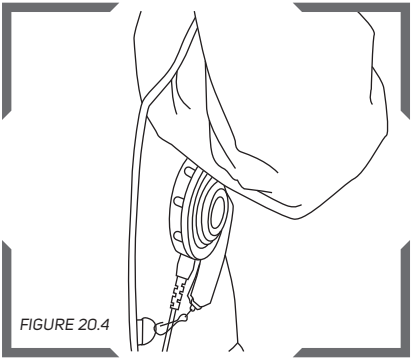

FIGURE 20.4

To operate the device, press your elbow onto the PTT Button, and then speak.

COMMS-LINK INSTRUCTIONS CONTINUED

INSTALLATION

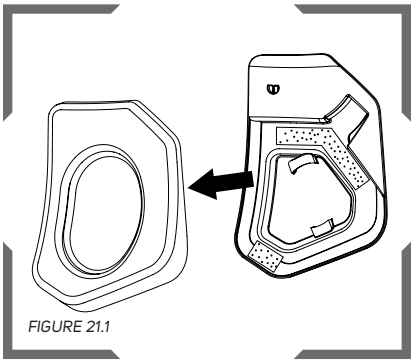

FIGURE 21.1

Remove the side pad from the cover that is attached with velcro on the side of the helmet that the Comms-Link is to be installed. The Comms-Link can be installed on either side of the helmet.

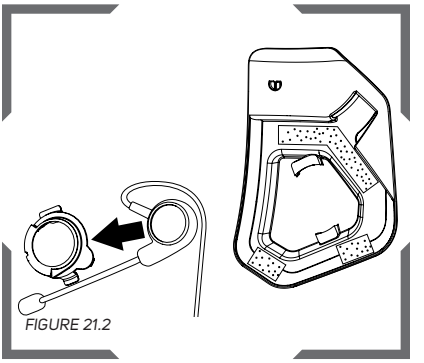

FIGURE 21.2

Place the Comms-Link ear piece into the attachment clip. Then attach the Comms-Link Clip into the slots on the inside of the cover.

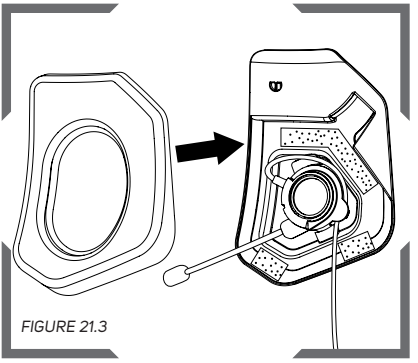

FIGURE 21.3

Attach the side pad back onto the cover over the Comms-Link ear piece.

Protecting you for life's best moments.

RADIO CONNECTORS COMPATIBILITY

09-930

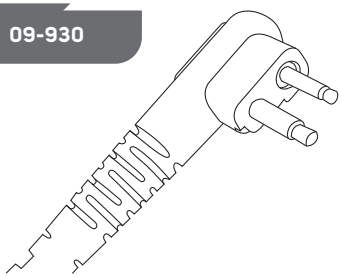

FIGURE 22.1

MOTOROLA
AXU4100, AXV5100, BPR40, CLS1110, CLS1410, CLS1413, CLS1450C, CLS1453C, CP100, CP150, CP185, CP200, CP88, CT125, CT150, CT250, CT450, CT450LS, DTR, DTR410, DTR550, DTR650, GP200, GP2000, GP300, GP308, GP68, GP88, GTI, GTX, LTS2000, P040, P080, P110, P1225, P1225LS, P200, P2000, PR400, RDK, RDU, RDU2020, RDU2080D, RDU4100, RDU4160D, RDV, RDV2020, RDV2080D, RDV5100, SP10, SP21, SP50, VL50, XTN, XTN446, XTN500, XTN600, XU1100, XU2100, XU2600, XV1100, XV2100, XV2600

RELM
RPU6500, RPV6500

09-931

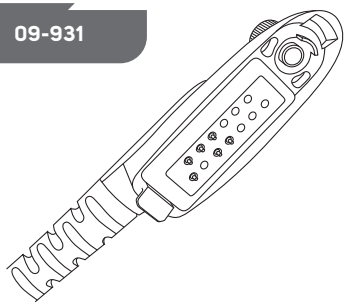

FIGURE 22.2

HYT
TC-980

MOTOROLA
CBPRO, GP1280, GP140, GP320, GP328, GP329, GP338, GP339, GP340, GP360, GP380, GP640, GP650, GP680, GP960, HT1250, HT1250LS, HT1550, HT1550XLS, HT750, JT1000, MTX8250, MTX8250LS, MTX850, MTX850LS, MTX9250, MTX950, PR860, PRO5150, PRO5350, PRO5450, PRO5550, PRO5750, PRO7150, PRO7350, PRO7450, PRO7550, PRO7750, PRO9150, PTX700, PTX760, PTX780

09-932

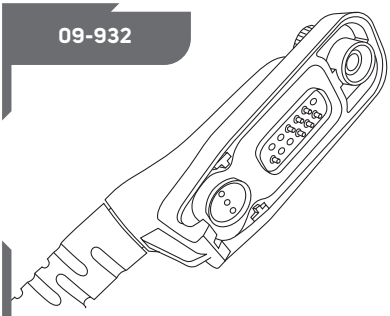

FIGURE 22.3

MOTOROLA
Turbo
APX 7000, XPR6300, XPR6500, XPR6550,
APX 7500, XPR6100, XPR6350, XPR6580

RADIO CONNECTORS COMPATIBILITY CONTINUED

09-933

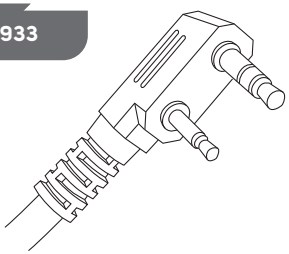

FIGURE 22.4

HYT
TC-268, TC-268S, TC-270, TC-368, TC-368S, TC-370

KENWOOD
TH-22AT, TH-235A, TH-28A, TH-42AT, TH-48A, TH-77A, TH-78A, TH-D7A(G), TH-F6, TH-F6A, TH-G71A, TH-K2AT, TK-208, TK-2100, TK-2102, TK-2130, TK-2160, TK-2170, TK-220, TK-2200, TK-2200LP, TK-2212L, TK-2302VK, TK-240, TK-240D, TK-248, TK-250, TK-260, TK-260D, TK-260G, TK-270, TK-270G, TK-272G, TK-308, TK-3100, TK-3101, TK-3102, TK-3130, TK-3131, TK-3160, TK-3170, TK-3173, TK-320, TK, 3200, TK-3200LP, TK-3212L, TK-3230, TK-3230XLS, TK-3302UK, TK-340, TK-340D, TK-348, TK-350, TK-353, TK-360, TK-360G, TK-370, TK-370G, TK-372G, TK-373, TK-430, TK-431, TK-2312, TK-3312

RELM
RPU416, RPU4200, RPU499, RPV4200, RPV516, RPV599X

09-934

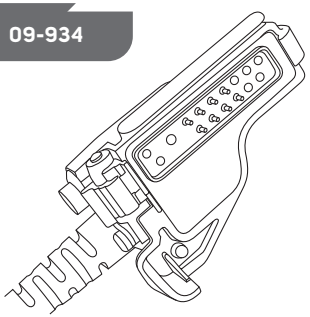

FIGURE 22.5

EF JOHNSON
51 SLES Series, 5100 Series, 511X, 512X, 514X, 518X, Ascend ES Series

MOTOROLA
GP900, GP9000, HT1000, MT1500, MT2000, MTS2000, MTX8000, MTX838, MTX900, MTX9000, MTX960, MTXLS, PRI500, X1500, XTS1500, XTS2000, XTS2500, XTS3000, XTS3500, XTS5000, GP1200

09-935

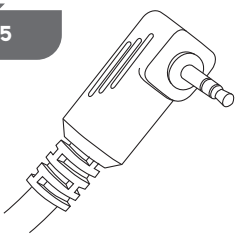

FIGURE 22.6

COBRA
CXR700, CXR800, CXR900, CXR920, CXT400, LI Series, LI3900, LI5600, LI6000, LI6500, LI6700, LI7000, LI7020, MRHH100, MRHH200, PR Series, PR190, PR240, PR245, PR3000, PR3100, PR3175, PR350, PR4000, PR4100, PR4250, PR4300, PR5000, PR560

HYT
TC-320

MOTOROLA
EM1000, FR50, FR60, FV300, FV300R, FV700R, FV750R, MH230R, MJ270R, MR350R, MR355R, SPIRITGT, SPIRITGT Plus, SX600R, SX900R, T270, T280, T289, T5100, T5200, T5300, T5320, T5400, T5410, T5420, T5500, T5600, T5620, T5700, T5710, T5720, T5800, T5820, T5920, T5950, T6200, T6210, T6220, T6250, T6300, T6320, T6400, T6500, T7200, T7400, T8500, T8550, T9500XLR, T9550XLR, T9580R, T9680R, T9750R, TalkAbout

PARTS AND ACCESSORIES

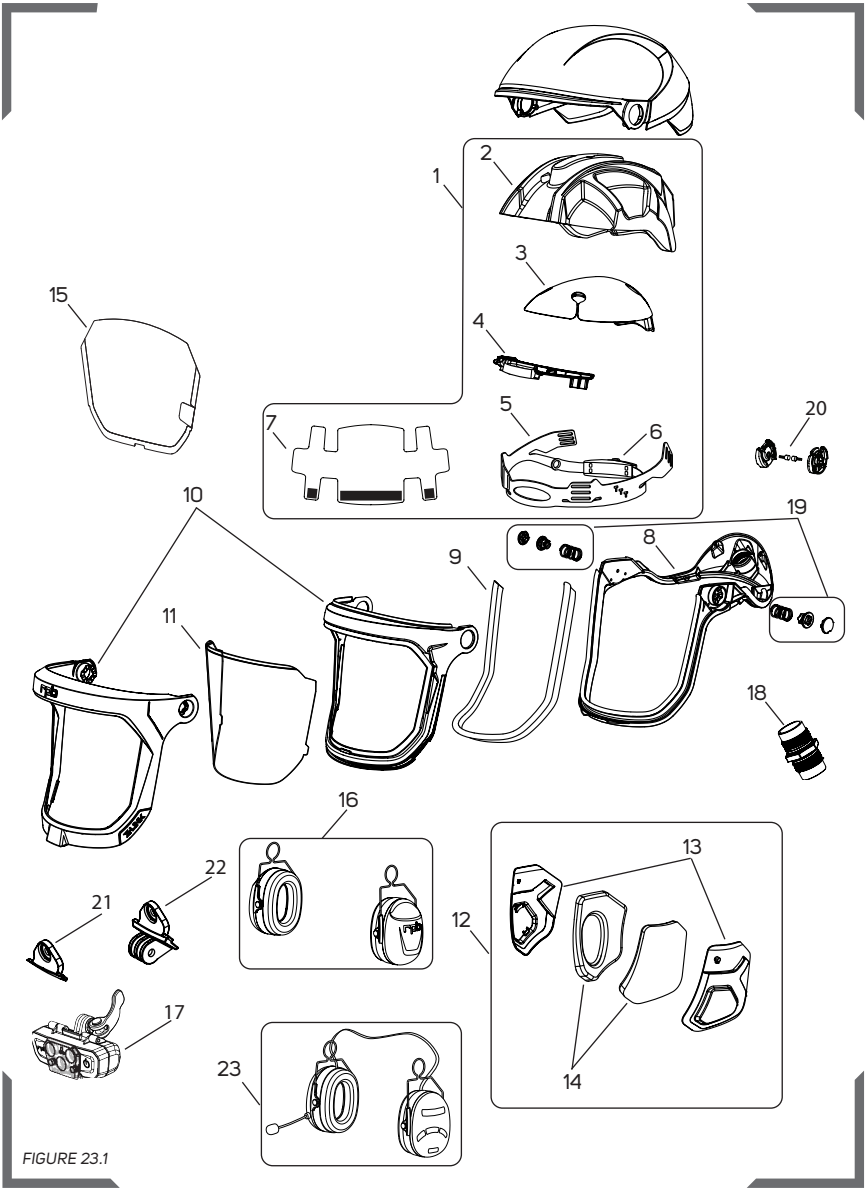

FIGURE 23.1

PARTS LIST

Item Number	Description	Part Number
1	Comfort-Link™ (16-521, 522, 525, 526, 530, 531)	16-520-T
2	Impact Absorber	16-521
3	Comfort Pad	16-522
4	Head Harness Bracket and Air Director	16-525
5	Head Harness	16-531
6	Ratchet Adjuster Assembly	16-530
7	Head Harness Brow Pad	16-526
8	Jaw with Lens Seal	16-514
9	Lens Seal	16-515
10	Visor	16-611
11	Safety Lens	16-810
	Safety Lens Smoke Tinted - AF/AS	16-810-ST
	Safety Lens Yellow - AF/AS	16-810-YT
	Safety Lens Smoke Tinted Mirror - AF	16-810-SM
	Safety Lens IR Tinted Shade 3	16-810-IR3
	Safety Lens IR Tinted Shade 5	16-810-IR5
12	Side Padding System	16-520-S
13	Side Padding Frames	16-527
14	Foam Side Pads	16-528
15	Tear-Off Lenses	16-811
16	Quiet-Link Helmet Earmuffs	18-533
17	Vision-Link Light	16-901
18	Breathing Tube Adapter	16-519
19	Pivot Assembly - Springs, Pivot Pins, and Caps	16-616
20	Mounting Brackets with screws	16-516
21	Front Cape Clip Cover	15-831
22	Front Cape Clip - Vision-Link Mount	15-839
23	SENA® Tufftalk M-02	
	- Helmet Mounted Communication Earmuffs	18-534

⚠ WARNING **Use only exact, authentic GVS-RPB replacement parts (marked with the GVS-RPB logo and part number), and only in the specified configuration. Using incomplete or inappropriate equipment, including the use of counterfeit or non-GVS-RPB parts, can result in inadequate protection and will void the approval of the entire respirator assembly.**

Z-LINK+ PARTS AND ACCESSORIES

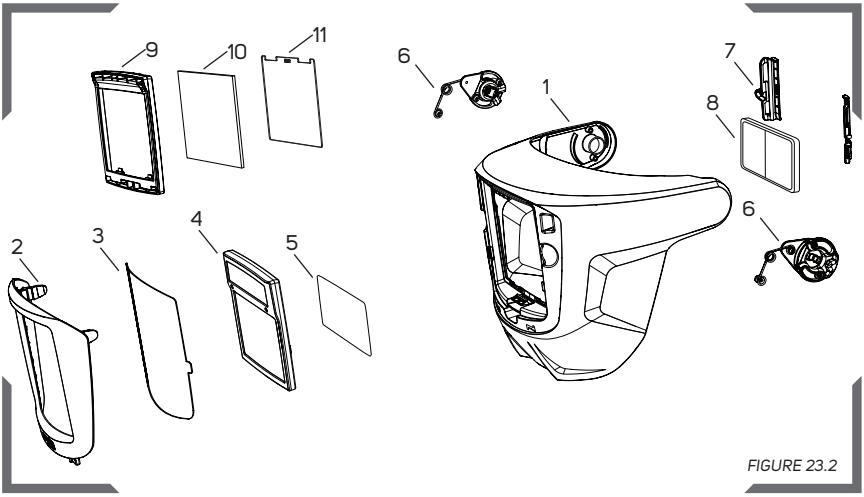

FIGURE 23.2

Item Number	Description	Part Number
1	Welding Visor	16-671
	Welding Visor w/ADF Lens	16-670
2	Welding Lens Retainer	16-672
3	Welding Impact Lens	16-872
4	ADF Lens	16-871
5	Rear ADF Lens	16-873
6	Attachment Clip and Springs	16-673
7	Magnifying Lens Holder	16-875
8	Magnifying Lens 1.0 (107 x 51)	13-072-1
	Magnifying Lens 1.5 (107 x 51)	13-072-1.5
	Magnifying Lens 2.0 (107 x 51)	13-072-2
	Magnifying Lens 2.5 (107 x 51)	13-072-2.5
9	Fixed Shade Lens Frame	16-877
10	Fixed Shade 5 Welding Lens	16-877-5
	Fixed Shade 8 Welding Lens	16-877-8
	Fixed Shade 9 Welding Lens	16-877-9
	Fixed Shade 10 Welding Lens	16-877-10
	Fixed Shade 11 Welding Lens	16-877-11
	Fixed Shade 12 Welding Lens	16-877-12
11	Fixed Shade Rear Protective Lens	16-878

CAPES AND FACE SEALS

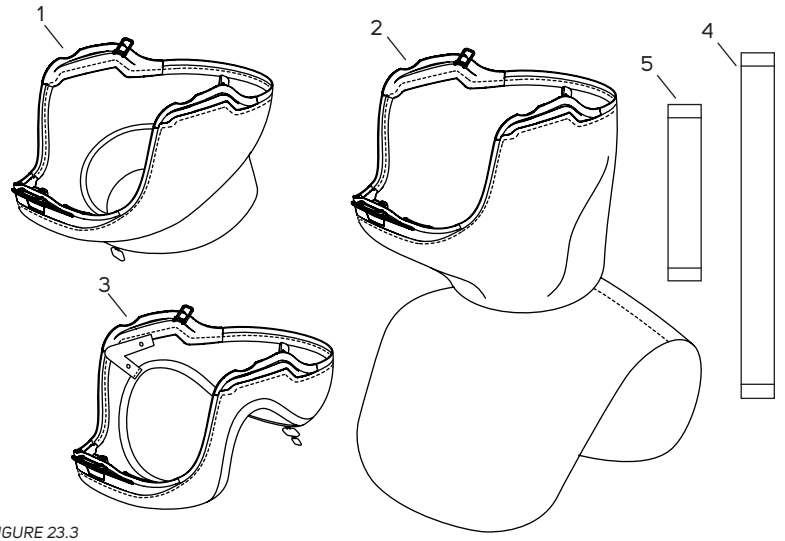

FIGURE 23.3

Item Number	Description	Part Number
1	Zytec Face Seal	16-711
	Tychem® 2000 Face Seal	16-712
	Tychem® 4000 Face Seal	16-713
2	Zytec Shoulder Cape	16-721
	Tychem® 2000 Shoulder Cape	16-722
	Tychem® 4000 Shoulder Cape	16-723
3	Zytec Chin Seal	16-731
	Tychem® 4000 Chin Seal	16-733
4	FR Breathing Tube Cover	04-854
	Tychem® Breathing Tube Cover	04-852
	Clear Plastic Breathing Tube Cover (pack of 10)	04-856
5	FR Breathing Tube Cover for backpack	04-874
	Tychem® Breathing Tube Cover for backpack	04-872

Z-LINK RADIANT HEAT PARTS AND ACCESSORIES

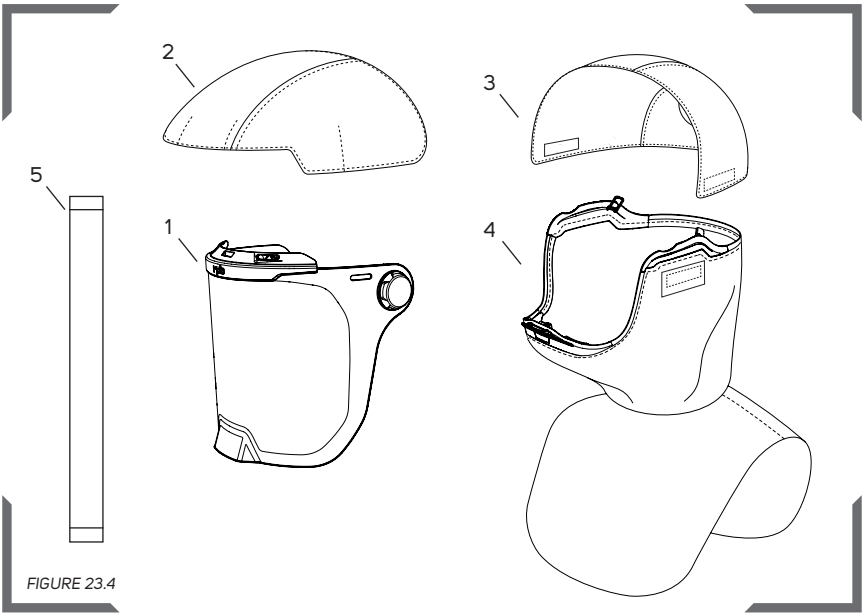

FIGURE 23.4

Item Number	Description	Part Number
1	Radiant Heat Gold Visor c/w Cover Clip, Retainer Assembly	16-675-GT
	Radiant Heat Gold Visor IR5 c/w Cover Clip, Retainer Assembly	16-675-GTIR5
	IR5 Visor - not plated c/w Cover Clip, Retainer Assembly	16-675-IR5
2	Aluminized Top Cover	16-744
3	Aluminized Rear Cover	16-754
4	Aluminized Shoulder Cape	16-724
5	Aluminized Breathing Tube Cover	04-855
	Aluminized Breathing Tube Cover for backpack	04-875

COMMS-LINK PARTS AND ACCESSORIES

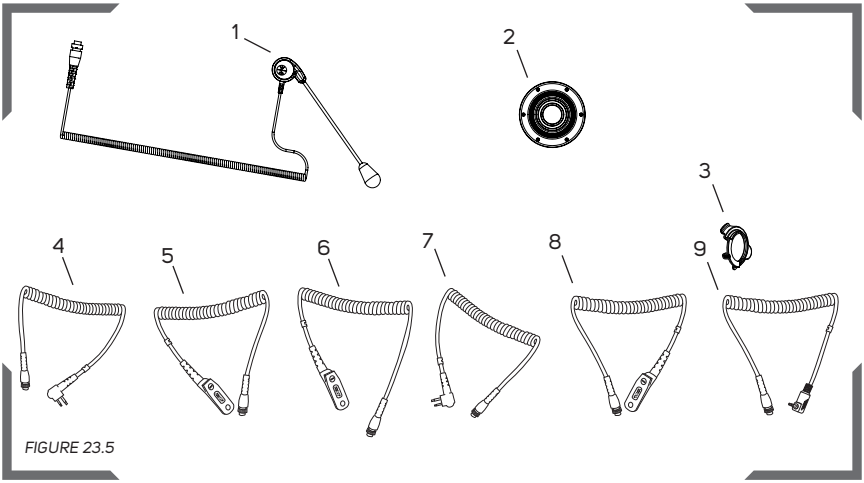

FIGURE 23.5

Item Number	Description	Part Number
1	Comms-Link Communication System	16-922
2	PTT	09-913
3	Comms-Link Clip	16-529
4	Two Pin	09-930
5	Multi Pin	09-931
6	Multi Pin	09-932
7	Two Pin	09-933
8	Multi Pin	09-934
9	One Pin	09-935

Other Radio Connectors may be available.

PAPR PARTS AND ACCESSORIES

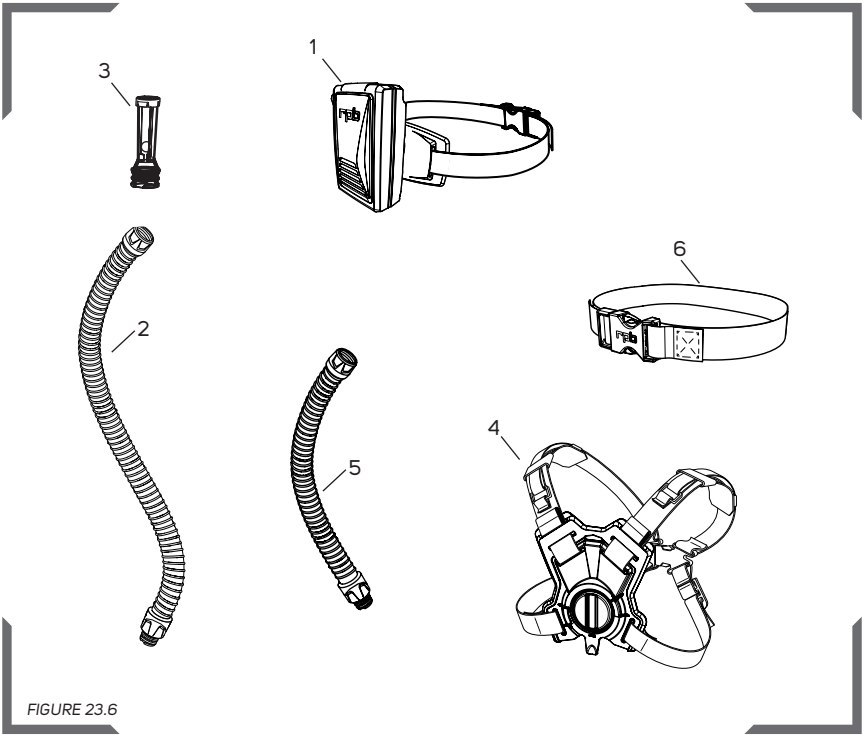

FIGURE 23.6

Item Number	Description	Part Number
1	PX5 PAPR and Belt	03-801
2	PAPR Breathing Tube	04-831
3	PAPR Flow Meter	03-819
4	FR Backpack Assembly	03-822-FR
	Easy Clean Backpack Assembly	03-822-DC
5	Short Breathing Tube for Backpack Assembly	04-841
6	2" Belt	07-765
	FR 2" Belt f	07-765-FR
	Easy Clean 2" Belt	07-765-DC

FLOW CONTROL DEVICES

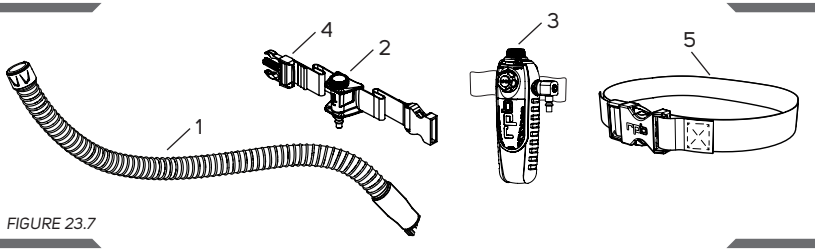

FIGURE 23.7

Item Number	Description	Part Number
1	SAR Breathing Tube	04-833
2	Constant Flow Valve Assembly and Belt	03-102
3	C40 Climate Control Assembly and Belt	03-502
4	Belt for Constant Flow Vlave	NV2022
5	2" Belt for C40	07-765
	FR 2" Belt for C40	07-765-FR
	Easy Clean 2" Belt for C40	07-765-DC

AIR SUPPLY HOSES

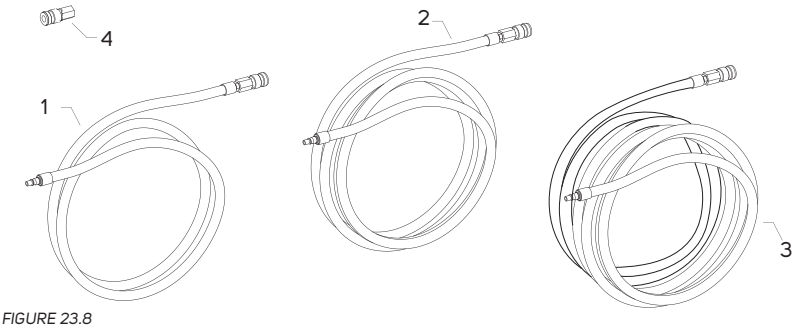

FIGURE 23.8

Item Number	Description	Part Number
1	7.5m Air Supply Hose 3/8" (9.5mm)	04-322-25
2	15m Air Supply Hose 3/8" (9.5mm)	04-322-50
3	30m Air Supply Hose 3/8" (9.5mm)	04-322-100
4	Quick Release Coupler	03-022-CF

Protecting you for life's best moments.

LIMITED WARRANTY

RPB® warrants that its Products will be free from defects in materials and workmanship for one (1) year, subject to the terms of this limited warranty. The Products are sold only for commercial use, and no consumer warranties apply to the Products. This limited warranty is for the benefit of the original Product purchaser, and cannot be transferred or assigned. This is the sole and exclusive warranty provided by RPB®, and ALL CONDITIONS AND IMPLIED WARRANTIES (INCLUDING ANY WARRANTY OF MERCHANTABILITY OR FITNESS FOR A PARTICULAR PURPOSE) ARE EXCLUDED AND DISCLAIMED FROM WARRANTY COVERAGE. RPB's® limited warranty coverage does not apply to damage resulting from accident, improper use or misuse of the Products, wear and tear resulting from the normal use of the Products, or the failure to properly maintain the Products.

RPB's® limited warranty coverage runs from the original date of purchase of the Products, and applies only to warranted defects which first manifest themselves and are reported to RPB® within the warranty period. RPB® retains the right to determine to its reasonable satisfaction whether any claimed defect is covered by this limited warranty.

If a warranted defect occurs, RPB® will repair or replace the defective Product (or a component of the Product), in its sole discretion. This "repair or replacement" remedy is the sole and exclusive remedy under this limited warranty, and under no circumstances shall RPB's® liability under this limited warranty exceed the original purchase price for the Products (or the applicable component). RPB® has no responsibility for incidental or consequential damages, including loss of use, maintenance and other costs, and ALL INCIDENTAL AND CONSEQUENTIAL DAMAGES ARE EXCLUDED AND DISCLAIMED from this limited warranty. Contact RPB® to obtain warranty service. Proof of purchase must be provided to obtain warranty service. All costs of returning the Products to RPB® for warranty service must be paid by the purchaser.

RPB® reserves the right to improve its Products through changes in design or materials without being obligated to purchasers of previously manufactured Products.

LIABILITY

RPB® Safety cannot accept any liability of whatsoever nature arising directly or indirectly from the use or misuse of RPB® Safety products, including purposes that the products are not designed for. RPB® Safety is not liable for damage, loss or expense resulting from the failure to give advice or information or the giving of incorrect advice or information, whether or not due to RPB® Safety's negligence or that of its employees, agents or subcontractors.

NOTES

Protecting you for life's best moments.

NOTES

NOTES

ISO9001
CERTIFIED COMPANY

OTHER PRODUCTS

RPB® QUIET-LINK™ EAR DEFENDERS

The RPB QuieT-LINK ear defender system fits directly to the Z-LINK and T-LINK with no modifications. Combine with RPB® Earplugs for the ultimate in hearing protection. Protect your hearing for Life's Best Moments.



SENA TUFFTALK M-02®

Providing in helmet noise protection and communications with mesh networking, hands-free communication, and cell phone connectivity. Designed to mount directly inside the helmet of the Z-LINK® and the T-LINK®.



RPB PX5 PAPR

The RPB PX5 is a compact and versatile PAPR that changes the way people experience clean filtered air across multiple industries – from medical and chemical settings, to the profoundly harsh environments of foundries. Boasting a sleek lightweight design, the PX5 contours to the users back, evenly distributing weight through its vertical mounting. With simple considered edges, curves and sealed housing unit, the PX5 is certified to meet IP65 in use for ease of decontamination.



MAN-34

gvs-rpb.com | 1-866-494-4599

GVS | rpb

Protecting you for life's best moments.